Andy Beshear
GOVERNOR

TRANSPORTATION CABINET
200 Mero Street
Frankfort, Kentucky 40601

Jim Gray
SECRETARY

July 23, 2025

CALL NO. 200
CONTRACT ID NO. 251016
ADDENDUM # 2

Subject: Laurel- Whitley Counties, 121GR25D016-NHPP
Letting July 24, 2025

(1) Revised - Special Note – Pages 76-78 of 287
(2) Added - Special Note – Pages 70A, 79-79CC of 287
(3) Revised – Material Summary – Pages 214-225 of 287
(4) Revised – Proposal Bid Items – Pages 277-287 of 287
(5) Revised – Plan Sheets: R2K, Structure 25767: S1, S2, S4, S5, S6, S27, S30, S31, S32, S35, S36, S36A

Proposal revisions are available at http://transportation.ky.gov/Construction-Procurement/.

If you have any questions, please contact us at 502-564-3500.

Sincerely,

Rachel Mills

Rachel Mills, P.E.
Director
Division of Construction Procurement

RM:mr
Enclosures

Special Note for "Delivery of Asphalt Milling" and "Removal and Delivery of Cable Barrier" I-75 Widening Whitley-Laurel Co. 11-14.8

Contrary to the plan note titled "Delivery of Asphalt Milling" on plan sheet R2U, the Contractor shall deliver 5,000 tons of asphalt millings to the Laurel County Maintenance Garage and 5,000 tons to the Whitley County State Maintenance Garage.

Contrary to the plan note titled "Removal and Delivery of Cable Barrier" on plan sheet R2U, all material listed in the note shall be delivered to Whitley County State Maintenance Garage.

SPECIAL NOTE FOR CONCRETE SEALING

These Notes or designated portions thereof, apply where so indicated on the plans, proposals or bidding instruction.

I. DESCRIPTION. Perform all work in accordance with the Department's 2019 Standard Specifications, and applicable Supplemental Specifications, the attached sketches, and these Notes. Section references are to the Standard Specifications.
This work consists of: (1) Furnish all labor, materials, tools, and equipment; (2) Clean the bridge deck; (3) Seal the bridge deck; (4) Maintain & control traffic; and, (5) Any other work specified as part of this contract.

II. MATERIALS.

A. Sealer. Use a sealer from the KYTC list of approved materials.

B. Coverage Rate: Follow all manufacturers recommendations for coverage rates except the application rate must not exceed the square footage coverage rate per gallon of sealer as given in the chart below. If the manufacturer recommends a coverage rate greater than given in the table below, apply sealer at the rate given in the table below for the chosen sealers silane percentage.

% Silane	Coverage rate (ft^2/gallon)
100	300
40	120
20	60

III. CONSTRUCTION.

A. Curing Compound. Contrary to Section 609.03.12 of the specifications, curing compound is not to be used on this deck due to potentially causing issues with the concrete sealer. During the deck pour, finishing, and tining operations the Class AA concrete shall be kept continuously moist with the use of a mister until burlap or curing blankets are applied to the surface. At no point should water be pooling or running off the surface or the surface of the concrete be allowed to become dry. After the burlap or curing blankets are installed, cure in accordance with the specifications. Include all costs in the unit price bid for Class AA concrete. Failure to properly cure the concrete in accordance with this note and the specifications may result in weakened or cracked concrete. If the concrete is weakened or cracked due to improper curing, the contractor will be responsible for providing alternates to fix the issues to the Engineer for review and the contractor will be solely responsible for all costs to do so, up to complete replacement. Do not begin any construction on fixing any issues without approval of the Engineer.

B. Contract Time. Concrete Sealing may need to be installed after contract time has elapsed in a separate mobilization and after the Engineer has declared the project otherwise complete. Liquidated damages shall not be charged provided Concrete Sealing is complete within 60 days after the last concrete pour on the structure. When the Contractor has not completed Concrete Sealing within the time frame allotted, Liquidated Damages shall be charged at 25 percent of the original contract daily charge from the expiration of the time allowed until the Contractor completes the work except the Department will not deduct liquated damages when weather limitations prohibit the Contractor from performing the work.

C. Cleaning the Deck. Dry clean the deck to remove all loose debris. Remove all visible hydrocarbons from the surface with detergent approved by the manufacturer of the deck sealant. Pressure wash all surfaces to be sealed at 2000 to 3000 psi. Install pressure gauges at each wand to verify pressure. Use 30° fan tip or as recommended by the manufacturer of the deck sealant. Hold pressure washing wand a minimum of 45° from the deck with a maximum stand-off distance of 12 inches.

D. Sealing the Deck. Allow new concrete to cure a minimum 28 days prior to application of sealer. Monitor weather conditions prior to sealer application. Refer to manufacturer's recommendations for proper ambient conditions. Do not apply sealer if precipitation is anticipated within the time stated by the manufacturer. Allow the deck to dry 24 hours (after washing or rain event) before sealer application. The deck can be reopened to traffic while drying. Sealer must be applied within 48 hours of washing or the deck must be rewashed. Divide the deck into predefined areas of specific square footage to aid in determining usage. Comply with manufacturer's usage recommendation. Using a low pressure pump, apply sealer and spread evenly with broom or squeegee; do not allow pooling to remain. When each predefined area is complete, measure the amount of sealer used to verify proper usage. After sealing, follow manufacturer's recommended cure time before opening to traffic. On vertical surfaces, apply the sealer in a flooding application from the bottom up, so the material runs down 6 to 8 inches below the spray pattern.

E. Inspection: Monitor all aspects of the project to assure compliance to this specification. Observe and document general conditions during the entirety of the project. Verify that each phase of work has been satisfactorily completed prior to beginning the next phase. Phases are described as follows:

1. Dry cleaning to remove loose debris, verify and document:
   a. All debris has been removed and disposed of properly.
2. Removal of hydrocarbons, verify and document:
   a. The manufacturer's recommended detergent is used for removal.
   b. Hydrocarbons have been satisfactorily removed.
3. Pressure washing, verify and document:
   a. Washing pressure at the wand.
   b. Tip size used.
   c. Wash angle and stand-off distance.

d. The deck is satisfactorily cleaned.

4. Sealer application, verify and document:
   a. Proper cure time for new concrete.
   b. Deck surface is dry.
      1. Document time since washed.
      2. Was deck opened to traffic after washing?
   c. Ambient conditions.
      1. Document ambient temperature, surface temperature, relative humidity, and dew point.
   d. Application and distribution method.
   e. Coverage to be complete and even.
   f. Material is not allowed to remain pooled.
   g. Monitor material usage.
   h. No traffic until proper cure time is allowed.

IV. MEASUREMENT

A. Concrete Sealing. The Department will measure the quantity per square feet of each area sealed.

B. Mobilization – For Concrete Surface Treatment. The Department will pay the lump sum bid for an additional mobilization when Concrete Sealing must be performed after the Engineer has deemed the project complete except for Concrete Sealing, structure is opened to traffic, and Contractor has fully demobilized.

V. PAYMENT

A. **23378EC - Concrete Sealing – Sq. Ft.** Payment at the contract unit price per square feet is full compensation for the following: (1) Furnish all labor, materials, tools, and equipment; (2) Clean the bridge deck; (3) Seal the bridge deck; (4) Maintain & control traffic; and, (5) Any other work specified as part of this contract.

B. **26233EC - Mobilization – For Concrete Surface Treatment – L.S.** Payment at the contract lump sum price bid shall be full compensation for the Contractor to remobilize on the project to perform Concrete Sealing as detailed herein this special note.

11C

SPECIAL NOTE FOR DRILLED SHAFTS

I-75 Widening in Laurel and Whitley Counties
Item No. 11-14.8

1.0 DESCRIPTION. Furnish all equipment, materials and labor necessary for constructing reinforced concrete drilled shafts in cylindrically excavated holes according to the details shown on the plans or as the Engineer directs. Construct the shaft to the lines and dimensions shown on the plans, or as the Engineer directs. Section references herein are to the Department's Current Standard Specifications for Road and Bridge Construction.

2.0 MATERIALS.

2.1 Concrete. Use Class A Modified concrete unless otherwise shown on the plans. The slump at the time of placement shall be 6.5 to 9.5 inches, the coarse aggregate shall be size 67, 68, or 78, and the water/cementitious material ratio shall not exceed 0.45. Include water reducing and retarding admixtures. Type F high range water reducers used in combination with retarding admixtures or Type G high range water reducers fully meeting trial batch requirements are permitted and Class F fly ash is permitted in conformance with Section 601. Design the mix such that the concrete slump exceeds 4 inches at 4 hours after batching. If the estimated concrete transport, plus time to complete placement, exceeds 4 hours, design the concrete to have a slump that exceeds 4 inches or more for the greater time after batching and demonstrate that the slump requirement can be achieved after the extended time using a trial batch.

Perform trial batches prior to beginning drilled shaft construction to demonstrate the adequacy of the proposed concrete mix. Demonstrate that the mix to be used will meet the requirements for temperature, slump, air content, water/cementitious material ratio, and compressive strength. Use the ingredients, proportions and equipment (including batching, mixing, and delivery) to be used on the project. Make at least 2 independent consecutive trial batches of 3 cubic yards each using the same mix proportions and meeting all specification requirements for mix design approval. Submit a report containing these results for slump, air content, water/cement ratio, temperature, and compressive strength and mix proportions for each trial batch to the Engineer for review and approval. Failure to demonstrate the adequacy of the concrete mix, methods, or equipment to the Engineer is cause for the Engineer to require appropriate alterations in concrete mix, equipment, and/or method by the Contractor to eliminate unsatisfactory results. Perform additional trial batches required to demonstrate the adequacy of the concrete mix, method, or equipment.

2.2 Steel Reinforcement. Provide Grade 60 deformed bars conforming to Section 811 of the Standard Specifications. Rail steel is permitted for straight bars only. Place according to Section 602 of the Standard Specifications, this Special Note, and the plans. Use non-corrosive centering devices and feet to maintain the specified reinforcement clearances.

2.3 Casings. Provide casing meeting the requirements of ASTM A 252 Grade 2 or better unless otherwise specified. Ensure casing is smooth, clean, watertight, true and straight, and of ample strength to withstand handling, installation, and extraction stresses and the pressure of both concrete and the surrounding earth materials. Ensure the outside diameter of casing is not less than the specified diameter of shaft.

Use only continuous casings. Cut off the casing at the prescribed elevation and trim to within tolerances prior to acceptance. Extend casing into bedrock a sufficient distance to stabilize the shaft excavation against collapse, excessive deformation, and/or flow of water if

required and/or shown on the plans.

Install from the work platform continuous casing meeting the design thickness requirements, but not less than 3/8 inch, to the elevations shown on the plans. When drilled shafts are located in open water areas, extend casings above the water elevation to the plan tip elevation to protect the shaft concrete from water action during concrete placement and curing. All casing is permanent unless temporary casing is specified in the contract drawings or documents. Permanent casing is incidental to the applicable drilled shaft unit bid price unless noted otherwise in the contract. Temporary casing may be required for drilled shafts not socketed into bedrock. If temporary surface casings are used, extend each casing up to the work platform. Remove all temporary surface casing prior to final acceptance unless otherwise permitted by the Central Office Construction Engineer.

Ensure casing splices have full penetration butt welds conforming to the current edition of AWS D1.1 with no exterior or interior splice plates and produce true and straight casing.

2.4 Slurry. When slurry is to be used for installation of the Drilled Shaft, submit a detailed plan for its use and disposal. The plan should include, but not be limited to the following:

1) Material properties
2) Mixing requirements and procedures
3) Testing requirements
4) Placement procedures
5) Disposal techniques

Obtain the Central Office Division of Construction's approval for the slurry use and disposal plan before installing drilled shafts.

2.5 Tremies. Provide tremies of sufficient length, weight, and diameter to discharge concrete at the shaft base elevation. Ensure the tremie diameter is least 6 times the maximum size coarse aggregate to be used in the concrete mix and no less than 10 inches. Provide adequate wall thickness to prevent crimping or sharp bends that restrict concrete placement. Support tremies used for depositing concrete in a dry drilled shaft excavation so that the free fall of the concrete does not cause the shaft excavation to cave or slough. Maintain a clean and smooth tremie surface to permit both flow of concrete and unimpeded withdrawal during concrete placement. Do not allow any aluminum parts to contact the concrete. Construct tremies used to deposit concrete for wet excavations so that they are watertight and will readily discharge concrete.

2.6 Concrete Pumps. Provide pump lines with a minimum diameter of 5 inches and watertight joints.

2.7 Drop Chutes. Do not use aluminum drop chutes.

3.0 CONSTRUCTION.

3.1 Preconstruction.

3.1.1 Prequalification. The Department will require prequalification by the Division of Construction Procurement before accepting a bid for the construction of Drilled Shafts.

3.1.2 Pre-Bid Inspection. Inspect both the project site and all subsurface

information, including any soil or rock samples, prior to submitting a bid. Contact the Geotechnical Branch (502-564-2374) to schedule a viewing of the subsurface information. Failure to inspect the project site and view the subsurface information will result in the forfeiture of the right to file a claim based on site conditions and may result in disqualification from the project.

3.1.3 Drilled Shaft Installation Plan. Upon request, the Department will review a Drilled Shaft Installation Plan. Submit the plan no later than 45 calendar days prior to constructing drilled shafts. Items covered in this plan should include, but not be limited to the following:

1) Name and experience record of jobsite drilled shaft superintendent and foremen in charge of drilled shaft operations for each shift.
2) List and size of proposed equipment including cranes, drills, augers, bailing buckets, final cleaning equipment, de-sanding equipment, slurry pumps, core sampling equipment, tremies or concrete pumps, casings, etc.
3) Details of overall construction operation sequence and the sequence of shaft construction in the bents or groups.
4) Details of shaft excavation methods including methods to over-ream or roughen shaft walls, if necessary.
5) Details of slurry when the use of slurry is anticipated. Include methods to mix, circulate, and de-sand the proposed slurry. Provide details of proposed testing, test methods, sampling methods, and test equipment.
6) Details of proposed methods to clean shaft and inside of casing after initial excavation.
7) Details of reinforcement handling, lifting, and placement including support and method to center in shaft. Also include rebar cage support during concrete placement and temporary casing removal.
8) Details of concrete placement including procedures for concrete tremie or pump. Include initial placement, raising during placement, and overfilling of the shaft to expel contaminated concrete.
9) Required submittals including shop drawings and concrete design mixes.
10) Other information shown in the plans or requested by the Engineer.
11) Special considerations for wet construction.
12) Details of environmental control procedures to protect the environment from discharge of excavation spoil, slurry (natural and mineral), and concrete over-pour.

The Division of Construction will review the submitted procedure and provide comments and recommendations. The Contractor is responsible for satisfactory construction and ultimate performance of the Drilled Shaft.

3.2 General Construction. Construct drilled shafts as indicated in the plans or described in this Special Note by either the dry or wet method. When the plans describe a particular method of construction, use this method unless the Engineer permits otherwise. When the plans do not describe a particular method, propose a method on the basis of its suitability to the site conditions.

The construction of the first drilled shaft will be used to determine if the methods and equipment used by the contractor are sufficient to produce a completed shaft meeting the requirements of the plans and specifications. Ability to control dimensions and alignment of

excavations within tolerances; to seal the casing into impervious materials; to prevent caving or deterioration of subsurface materials by the use of slurry or other means; to properly clean the completed shaft excavation; to construct excavations in open water areas when required by the plans; to establish methods for belling or over-reaming when required by the plans; to determine the elevation of ground water; to satisfactorily handle, lift, place, and support the reinforcement cage; to satisfactorily place concrete meeting the specifications within the prescribed time frame; and to satisfactorily execute any other necessary construction operations will be evaluated during construction of the first shaft(s). Revise the methods and equipment as necessary at any time during the construction of the first shaft when unable to satisfactorily carry out any of the necessary operations described above or unable to control the dimensions and alignment of the shaft excavation within tolerances.

If at any time the Contractor fails to satisfactorily demonstrate, to the satisfaction of the Engineer, the adequacy of methods or equipment and alterations are required, additional technique shafts will be required at no additional cost to the Department and with no extension of contract time. Additional technique shafts shall be located as near as possible to the proposed production shafts but in a location as not to interfere with other construction activities. Once approval has been given to construct production shafts, no changes will be permitted in the methods or equipment used to construct the satisfactory shaft without written approval of the Engineer.

Do not make a claim against the Department for costs of construction delays, or any materials, labor, or equipment that may be necessary due to the Contractor's failure to furnish drilled shafts of a length sufficient to obtain the required bearing values, or for variations in length due to subsurface conditions that may be encountered. Soundings, boring logs, soil profiles, or other subsurface data included in the Contract documents are used by the Department for design and making preliminary estimates of quantities and should be used only at the risk of the Contractor for determining equipment, materials, or labor necessary for drilling shafts as required by the contract.

When necessary, set temporary removable surface casing. Use surface casing of sufficient length to prevent caving of the surface soils and to aid in maintaining shaft position and alignment. Pre-drilling with slurry and/or over-reaming to the outside diameter of the casing may be required to install the surface casing at some sites.

Provide equipment capable of constructing shafts to the deepest shaft depth shown in the plans plus 15 feet, 20 percent greater than the longest shaft (measured from the ground or water surface to the tip of the shaft), or 3 times the shaft diameter, whichever is greater. Blasting excavation methods are not permitted.

Use permanent casing unless otherwise noted in the Contract. Place casing as shown on the plans before beginning excavation. If full penetration cannot be attained, the Engineer may direct that excavation through the casing be accomplished and the casing advanced until reaching the plan tip elevation. In some cases, over-reaming to the outside diameter of the casing may be required before placing the casing. Cut off the casing at the prescribed elevation and leave the remainder of the casing in place. Do not use vibratory hammers for casing installation within 50 feet of shafts that have been completed less than 24 hours.

3.2.1 Dry Construction Method. Use the dry construction method only at sites where the ground water table and soil conditions (generally stiff to hard clays or rock above the water table) make it feasible to construct the shaft in a relatively dry excavation and where the sides and bottom of the shaft are stable and may be visually inspected by the Engineer prior to placing the concrete. The dry construction method consists of drilling the shaft excavation, removing accumulated seepage water and loose material from the excavation, and placing the shaft concrete in a relatively dry excavation.

3.2.2 Wet Construction Method. Use the wet construction method at all sites where it is impractical to excavate by the dry method. The wet construction method consists of drilling the shaft excavation below the water table, keeping the shaft filled with water (including natural slurry formed during the drilling process) or slurry as defined in part 2.4 of this Special Note, desanding and cleaning the slurry as required, final cleaning of the excavation by means of a bailing bucket, air lift, submersible pump or other approved devices and placing the shaft concrete (with a tremie or concrete pump beginning at the shaft bottom) which displaces the water or slurry as concrete is placed.

Where drilled shafts are located in open water areas, construct the shafts by the wet method using casings extending from above water elevation to the plan casing tip elevation to protect the shaft concrete from water action during placement and curing. Install the casing in a manner that will produce a positive seal at the bottom of the casing.

3.3 Slurry. When the Contractor elects to use slurry, adjust construction operations so that the slurry is in contact with the bottom 5 feet of the shaft for less than 4 hours unless the Engineer approves otherwise. If the 4-hour limit is exceeded, over-ream the bottom 5 feet of shaft.

3.4 Cleaning. Over-reaming, cleaning, or wire brushing the sidewalls of the shaft excavation and permanent casings may be necessary to remove the depth of softening or to remove excessive slurry cake buildup as indicated by sidewall samples or other test methods employed by the Engineer. Over-ream around the perimeter of the excavation a minimum depth of 1/2 inch and maximum depth of 3 inches.

3.5 Subsurface Exploration. Take subsurface exploration borings when shown on the plans or as the Engineer directs to determine the character of the material that the shaft extends through and the material directly below the shaft excavation. Complete subsurface exploration borings prior to beginning excavation for any drilled shaft in a group. Unless directed otherwise, extend subsurface exploration borings a minimum depth of 3 shaft diameters but not less than 10 feet below the bottom of the anticipated tip of drilled shaft excavation as shown on the plans. For subsurface exploration borings where soil sampling is required use thin-wall tube samples and perform standard penetration tests according to the Department's current Geotechnical Manual. When shafts extend into bedrock, soil samples are not required unless otherwise specified. Perform rock core drilling according to the Department's Geotechnical Manual. When the Engineer directs, perform additional subsurface exploration borings prior to drilled shaft construction. Measure soil samples and/or rock cores and visually identify and describe them on the subsurface log according to the Department's current Geotechnical Manual. Subsurface exploration borings must be performed by contractors/consultants prequalified by the Department's Division of Professional Services for Geotechnical Drilling Services at the time that field work begins.

The Engineer or geotechnical branch representative may be on-site during the subsurface exploration process to evaluate the soil and/or rock core samples. The Engineer or geotechnical branch representative will determine the need to extend the borings to depths greater than the depths previously specified. Handle, label, identify, and store soil and/or rock samples according to the Department's current Geotechnical Manual and deliver them with the subsurface logs to the geotechnical branch's rock core lab in Frankfort within 24-hours of completing the borings, unless directed otherwise.

The Engineer will inspect the soil samples and/or cores and determine the final depth of required excavation (final drilled shaft tip elevation) based on evaluation of the material's suitability. The Engineer will establish the final tip elevations for shaft locations, other than

those for which subsurface exploration borings have been performed, based on the results of the subsurface exploration. Within 15 calendar days after completion of the subsurface exploration borings, the Engineer will notify the contractor of the final tip elevations for shaft locations.

3.6 Excavations. The plans indicate the expected depths, the top of shaft elevations, and the estimated bottom of shaft elevations between which the drilled shaft are to be constructed. Drilled shafts may be extended deeper when the Engineer determines that the material encountered while drilling the shaft excavation is unsuitable and/or is not the same as anticipated in the design of the drilled shaft. Drilled shafts may be shortened when the Engineer determines the material encountered is better than that anticipated.

Begin drilled shaft excavation the excavation, excavation inspection, reinforcement placement, and concrete placement can be completed as one continuous operation. Do not construct new shafts within 24 hours adjacent to recently completed shafts if the center-to-center spacing is less than 3 shaft diameters.

Dispose of excavated material removed from the shaft according to the Standard Specifications or the contract documents.

Do not allow workmen to enter the shaft excavation for any reason unless both a suitable casing has been installed and adequate safety equipment and procedures have been provided to the workmen entering the excavation. Recommended Procedures for the Entry of Drilled Shaft Foundation Excavations, prepared by ADSC: The International Association of Foundation Drilling provides guideline recommendations for down-hole entry of drilled excavations.

3.7 Obstructions. Remove subsurface obstructions at drilled shaft locations. Such obstructions may include man-made materials such as old concrete foundations or natural materials such as boulders. Blasting is not permitted.

3.8 Inspections of Excavations. Provide equipment for checking the dimensions and alignment of each shaft excavation. Determine the dimensions and alignment of the shaft excavation under the observation and direction of the Engineer. Provide equipment necessary to verify shaft cleanliness for the method of inspection selected by the Engineer.

Measure final shaft depths with a weighted tape or other approved methods after final cleaning. Ensure the base of each shaft has less than ½ inch of sediment at the time of concrete placement. For dry excavations, do not allow the depth of water to exceed 3 inches for tremie or pump methods of concrete placement. Verify shaft cleanliness to the Engineer using direct visual inspection or other method the Engineers determines acceptable. Video camera or underwater inspection procedures may be used if specified in the plans. Inspect the side surfaces of rock sockets to ensure they are rough and of such condition to ensure bond between the shaft concrete and the rock. Calipers, bent rods, or other devices may be used to inspect the diameter and roughness of rock sockets. When the Engineer directs, mechanically roughen surfaces found to be smooth.

3.9 Reinforcing Steel Cage Fabrication and Placement. Assemble the reinforcing steel cage, consisting of longitudinal bars, ties, spirals, cage stiffener bars, spacers, centering devices, and other necessary appurtenances and place as a prefabricated unit immediately after the shaft excavation is inspected and accepted, and just prior to concrete placement.

Tie the reinforcing steel with 100 percent double-wire ties and provide support so that it will remain within allowable tolerances for position. Locate splices as shown on the plans. Splice no more than 50 percent of the longitudinal reinforcing within 2-lap splice lengths of any location or within 3 feet of the splice location if approved mechanical connectors are used. All splices are to be in accordance with plan details. Use bands, temporary cross ties,

etc. as required to provide a reinforcement cage of sufficient rigidity to prevent racking, permanent deformations, etc. during installation.

Use concrete centering devices or other approved non-corrosive centering devices at sufficient intervals along the length of the reinforcement cage to ensure concentric spacing for the entire cage length. As a minimum, provide a set of non-corrosive centering devices at intervals not exceeding 5 feet throughout the length of the shaft. When the size of the longitudinal reinforcement exceeds one inch in diameter the minimum spacing may be increased to 10 feet. As a minimum, provide a set of centering devices within 2 feet of the top and 2 feet of the bottom of the shaft. In addition provide one set of centering devices 2 feet above and 2 feet below each change in shaft diameter. Provide feet (bottom supports) at the bottom of the shaft on vertical bars. As a minimum, provide non-corrosive centering devices at 60 degree intervals around the circumference of the shaft to maintain the required reinforcement clearances. Ensure the centering devices maintain the specified annular clearance between the outside of the reinforcing cage and the side of the excavated hole or casing.

Concrete centering devices and feet will be constructed of concrete equal in quality and durability to the concrete specified for the shaft. Use epoxy coated centering devices fabricated from reinforcing steel. Use feet (bottom supports) of adequate size and number to assure the rebar cage is the proper distance above the bottom as determined by part 3.11 3) of this Special Note. The feet are not intended to support the weight of the cage. In the event that the shaft has been excavated below the anticipated tip elevation, extend the reinforcing cage at the tip (low) end by lap splices, mechanical connectors, or welded splices conforming to the Standard Specifications. In this instance, splices need not be staggered and 100 percent of the reinforcing bars may be spliced at a given location. The bottom 12 inches of the shaft may not be reinforced when below plan tip elevation.

During concrete placement, support the reinforcing cage at or near the top of shaft such that the concrete feet are positioned approximately one inch above the bottom of shaft excavation. Not sooner than 24 hours after the completion of concrete placement, remove temporary supports. Provide the needed equipment, including extra cranes if necessary, to provide this cage support.

Prior to placing the reinforcement cage, demonstrate to the satisfaction of the Engineer that the fabrication and handling methods to be used will result in a reinforcing cage placed in the proper position, with the proper clearances, and without permanent bending, squashing, or racking of the reinforcement cage. During this demonstration bring the cage to an upright position, lower into a shaft excavation, and support as if for concrete placement.

Check the elevation of the top of the reinforcing cage before and after the concrete is placed. If the reinforcing cage is not maintained within the specified tolerances, correct to the satisfaction of the Engineer. Do not construct additional shafts until the contractor has modified his reinforcing cage support to obtain the required tolerances.

3.10 Concrete Placement. Place concrete according to the applicable portions of the Standard Specifications and with the requirements set forth herein. Do not apply the provisions of the Special Note 6U for Structural Mass Concrete.

Place concrete as soon as practical after reinforcing steel placement but no later than 4 hours after completion of the shaft excavation. Place concrete continuously from the bottom to above the top elevation of the shaft. For shafts that extend above ground or water surface, place concrete continuously after the shaft is full until good quality concrete is evident at the top of the shaft. Form any portion of the shaft above ground with a removable form or other approved method to the dimensions shown on the plans.

For shafts constructed in the wet with the top of the shaft below the water surface and below top of casing, place concrete to approximately one shaft diameter but no less than 2 feet above the top of shaft elevation. Remove contaminated concrete and deleterious material, as

determined by the Engineer, accumulated above the top of shaft elevation immediately after completing concrete placement. Deleterious material and contaminated concrete may be airlifted under a head of water or slurry provided that the head is maintained at or near the exterior water surface elevation. Carefully remove any concrete remaining above plan top of shaft after curing and excess casing removal.

Place concrete either by free fall, through a tremie, or concrete pump. Use the free fall placement method in dry holes only. The maximum height of free fall placement is 20 feet. Do not allow concrete placed by free fall to contact either the reinforcing cage or hole sidewall. Drop chutes may be used to direct concrete to the base during free fall placement.

Place concrete in the shaft in one continuous operation. Maintain a minimum slump of 4 inches or more throughout the placement for 4 hours after batching. Adjust approved admixtures in the concrete mix for the conditions encountered on the job so that the concrete remains in a workable plastic state throughout the placement. Perform slump loss tests to demonstrate that the concrete will maintain a 4-inch or greater slump for a period of time equal to the estimated transport plus the 2-hour placement time, but not less than 4 hours.

When the Engineer determines the concrete placement methods and/or equipment during construction of any technique and/or production shafts to be inadequate, make appropriate alterations to eliminate unsatisfactory results.

Drilled shafts not meeting the concrete placement requirements of this Special Note or contract plans are unacceptable. Correct all unacceptable completed shafts to the satisfaction of the Engineer.

3.10.1 Tremie Placement. Tremies may be used for concrete placement in either wet or dry holes. Extend the tremie to the shaft base elevation before starting underwater placement. Valves, bottom plates, or plugs may be used only if concrete discharge can begin approximately 2 inches above the excavation bottom. Remove plugs from the excavation unless otherwise approved by the Engineer. Maintain tremie discharge at or near the bottom of excavation as long as practical during concrete placement. Immerse tremie discharge end as deep as practical in the concrete but not less than 10 feet.

If at any time during the concrete pour the tremie line orifice is removed from the fluid concrete column and discharges concrete above the rising concrete surface, the entire drilled shaft is considered defective. In such case, remove the reinforcing cage and concrete, complete any necessary sidewall cleaning or over-reaming as directed by the Engineer, and repour the shaft.

3.10.2 Pumped Concrete. Concrete pumps and lines may be used for concrete placement in either wet or dry excavations. Do not begin concrete placement until the pump line discharge orifice is at the shaft base elevation.

For wet excavations, use a plug or similar device to separate the concrete from the fluid in the hole until pumping begins. Remove the plug unless otherwise approved by the engineer.

Ensure the discharge orifice remains at least 10 feet below the surface of the fluid concrete. When lifting the pump line during concrete placement, reduce the line pressure until the orifice has been repositioned at a higher level in the excavation.

If at any time during the concrete pour the pump line orifice is removed from the fluid concrete column and discharges concrete above the rising concrete level, the Department will consider the shaft defective. In such case, remove the reinforcing cage and concrete, complete any necessary sidewall cleaning or over-reaming as the Engineer directs, and repour the shaft.

3.10.3 Drop Chutes. Drop chutes may be used to direct placement of free fall concrete in excavations where the maximum depth of water does not exceed one inch. Do not use the free fall method of placement in wet excavations. Concrete may be placed through either a hopper at the top of the tube or side openings as the drop chute is retrieved during concrete placement. Reduce the height of free fall and/or reduce the rate of concrete flow into the excavation if the concrete placement causes the shaft excavation to cave or slough, or if the concrete strikes the reinforcing cage or sidewall. When the Engineer determines free fall placement cannot be accomplished satisfactorily, use either tremie or pumping to accomplish the pour.

3.11 Construction Tolerances. The following construction tolerances apply to drilled shafts unless otherwise stated in the contract document:

1) Construct drilled shaft within 3 inches of plan position in the horizontal plane at the top of the shaft.
2) Do not vary the vertical alignment of a shaft excavation from the plan alignment by more than 1/4 inch per foot of depth or 6 inches total.
3) Maintain the top of the reinforcing steel cage no more than 6 inches above and no more than 3 inches below plan position.
4) All casing diameters shown on the plans refer to O.D. (outside diameter) dimensions. The casing dimensions are subject to American Pipe Institute tolerances applicable to regular steel pipe. A casing larger in diameter than shown in the plans may be used, at no additional cost, with prior approval by the Department.
5) Maintain the top of shaft concrete within ± 3 inches from the plan top of shaft elevation, measured after excess shaft concrete has been removed.
6) Design excavation equipment and methods so that the completed shaft excavation will have a planar bottom. Maintain the cutting edges of excavation equipment normal to the vertical axis of the equipment within a tolerance of ± 3/8 inch per foot of diameter. The tip elevation of the shaft has a tolerance of ± 6 inches from final shaft tip elevation unless otherwise specified in the plans.

Drilled shaft excavations and completed shafts not constructed within the required tolerances are unacceptable. Correct all unacceptable shaft excavations and completed shafts to the satisfaction of the Engineer. When a shaft excavation is completed with unacceptable tolerances, present corrective measures designed by a registered Professional Engineer for approval.

4.0 MEASUREMENT.

4.1 Drilled Shafts. The Department will not measure for payment any trial batches required to demonstrate the adequacy of the concrete mix, method, or equipment; concrete required to fill an oversized casing or oversized excavation; obstruction removal; over-reaming or sidewall cleaning; inspection work or inspection equipment; materials or work necessary, including engineering analyses and redesign, to alter unacceptable work methods or to complete corrections for unacceptable work; and will consider them incidental to the Drilled Shaft. Unless noted otherwise in the contract documents, casing is incidental to the drilled shaft.

4.1.1 Drilled Shaft, Common. The Department will measure the length, in linear feet, of drilled shaft above the top of rock elevation shown on the plans. The

Department will consider this quantity Drilled Shaft, Common regardless of the character of material actually encountered.

4.1.2 Drilled Shafts, Solid Rock. The Department will measure the length, in linear feet, of drilled shaft below the top of rock elevation shown on plans. The Department will consider this quantity Drilled Shafts, Solid Rock regardless of the character of material actually encountered during excavation.

4.2 Rock Coring and Rock Sounding. The Department will measure Rock Sounding and Rock Coring shown on the plans, as specified in part 3.5 of this Special Note, and as the Engineer directs, in linear feet to the nearest 0.1-foot. If soil samples are specified in the contract documents they will be incidental to the unit price bid for Rock Sounding. The Department will not measure or pay for subsurface exploration performed deeper than the elevations indicated on the plans and/or in this Special Note, unless directed by the Engineer, and will consider it incidental to these items of work. Additionally, the Department will consider all mobilization, equipment, labor, incidental items, and operations necessary to complete the boring operations incidental to these items of work.

5.0 PAYMENT. The Department will make payment for the completed and accepted quantities under the following:

Code	Pay Item	Pay Unit
-----	Drilled Shaft, Diameter*, Common	Linear Foot
-----	Drilled Shaft, Diameter*, Solid Rock	Linear Foot
20745ED	Rock Sounding	Linear Foot
20746ED	Rock Coring	Linear Foot

* *See Plan Sheets for sizes of shafts*.

The Department will consider payment as full compensation for all work required in this note.

February 20, 2025

SPECIAL NOTE FOR NON-DESTRUCTIVE TESTING OF DRILLED SHAFTS

I-75 Widening in Laurel and Whitley Counties
Item No. 11-14.8

The following sections provide the requirements for non-destructive testing of the drilled shaft foundations, schedule requirements for submittals, reporting requirements and Contractor/Testing Subcontractor/Department responsibilities. The purpose of the non-destructive testing is to evaluate the integrity of the drilled shafts, to potentially detect voids or sloughed off or highly fractured zones of shale or sandstone or other discontinuities within and along the perimeter of the drilled shafts and to evaluate whether the shafts are within the specified geometrical tolerances.

References to the “Department” refer to the Kentucky Department of Highways and/or consultants acting on behalf of the Department.

In all cases, the Department reserves the right to request raw data, field notes and/or other available information that may be necessary to evaluate the results of testing specified in this Special Note. Upon request, provide any available information at no additional cost to the Department.

In all cases, the Department reserves the right to perform testing to obtain independent results of testing specified in this Special Note. Upon request, provide any assistance required for Department personnel to perform such testing at no additional cost to the Department.

At the request of the Engineer, personnel representing the Contractor (including testing subcontractors) and the Department may be required to attend a pre-test meeting to discuss procedures related to testing, reports, reviews, etc. This meeting will be at no additional cost to the Department.

Unless noted otherwise, the Department will respond to the Contractor regarding acceptability of submittals referenced in this Special Note within ten (10) business days. A “Business Day” is defined as any day except Saturdays, Sundays and Holidays, as defined in Section 101.03 of the Standard Specifications.

1.0 Crosshole Sonic Logging

1.1 Description

Crosshole Sonic Logging (CSL) is a nondestructive method to test the integrity of drilled shafts in accordance with ASTM D6760. It is the responsibility of the Contractor to supply all equipment and materials necessary to perform this testing and for obtaining the services of a CSL Testing Firm, which is experienced with CSL testing in accordance with Section 1.4.1 of this note and approved by the Department, to perform the testing.

The Contractor will be responsible for providing:

1. access tubes to be used for CSL testing of the drilled shafts;
2. watertight shoes, watertight caps, and non-shrink grout;
3. suitable working space and access to every shaft;
4. any other equipment, materials, or assistance necessary to accomplish the testing.

1.2 Materials

1.2.1 Access Tubes

1. Provide access tubes meeting the requirements below:
   a. 2 inch ID schedule 40 steel pipe conforming to ASTM A 53, Grade A or B, Type E, F, or S;
   b. contains round, regular internal diameters free of defects or obstructions, including any at pipe joints;
   c. capable of permitting the free, unobstructed passage of a 1.5-inch-diameter source and receiver probes; and
   d. watertight and free from corrosion with clean internal and external faces to ensure passage of the probes and a good bond between the concrete and the tubes.
2. Provide watertight shoes on the bottom and removable watertight caps on the top of the tubes.
3. The Engineer will accept access tubes based on visual inspection and certification that the steel pipe meets the requirements above.

1.2.2 Grout

Provide non-shrink grout to fill the access tubes and any cored holes at the completion of the CSL tests. Use grout conforming to Section 601.03.03 of the Standard Specifications.

1.3 Execution

1.3.1 Access Tube Installation

1. Install access tubes generally evenly-spaced and as shown below:
   - Per Drilled Shaft 4 Tubes

2. Securely attach the CSL tubes that are along the inside periphery to the spiral reinforcement. Wire-tie the tubes a minimum of every 3 ft. so they will stay in position during placement of reinforcement and concrete. Place the tubes so they will be parallel with each other and as near to vertical as possible in the finished shaft. Even moderate bending of the tubes will result in large regional variations in the data.
3. Place the tubes approximately 3 to 6 inches above the shaft tip and at least 3 ft. above the top of rebar cage, at least 3 ft. above the free water level (if above the ground surface), at least 1 ft. above the top of concrete, and at least 3 ft. above the top of casing. Under no circumstances may the tubes be allowed to come to rest on the bottom of the excavation.
4. Ensure that any joints in the tubes are watertight and no residual putty is remaining on the outside of the couplers.
5. Tubes may be extended with mechanical couplings. Do not use duct tape or other wrapping material to seal the joints. Welding of joints is prohibited.
6. During placement of the reinforcement cage, exercise care so that the tubes will not be damaged to the extent that would prevent a 1.5 inch diameter probe from passing through them.
7. After placing the reinforcing cage and before beginning concrete placement, **fill the tubes with clean potable water** and cap or seal the tube tops to keep debris out of the tubes. Replace the watertight caps immediately after filling the tubes with water.
8. Immediately before placing concrete, use a weighted tape to investigate all tubes to make sure that there are no bends, crimps, obstructions or other impediments to the free passage of the testing probes. Additionally, check to ensure there are no water leaks.
9. During removal of the caps from the tubes, exercise care so as not to apply excess torque, hammering, or other stresses which could break the bond between the tubes and concrete.
10. Immediately after concrete placement, recheck each access tube to ensure that the water level is at the top of the tube. (This is due to the potential for air bubbles entrapped in the tube to rise during the pour and lower the water level in the tube.)
11. After concrete placement and before the beginning of CSL testing, inspect the access tubes and report any access tubes that the 1.5 inch diameter test probe cannot pass through to the Engineer. The Engineer will evaluate whether the CSL testing can be successfully performed without the impacted tube(s); the Engineer may require the Contractor to, at its own expense, replace one or more tubes with 2-inch-diameter holes cored through the concrete for the entire length of the shaft, excluding the bottom 6 inches. Unless directed otherwise by the Engineer, locate core holes approximately 6 inches inside the reinforcement such that it does not damage the reinforcement. For each core hole drilled, record a log with descriptions of inclusions and voids in the cored

holes and submit a copy of the log and photographs to the Engineer. Preserve the cores, identify as to location and make available for inspection by the Engineer.

1.3.2 Grouting

After completion of the CSL testing, evaluation of results and upon being directed by the Engineer, remove the water from the access tubes and any cored holes, completely fill the tubes and holes with approved grout using the tremie method. After grouting, cut the tubes flush with the tops of the drilled shafts.

1.4 CSL Testing and Evaluation of Test Results

Make submittals in accordance with the Project requirements for submittals. See Table 1 below.

Table 1 – Schedule of CSL Submittals

Submittal Number	Submittal Item	Deadline	Event
1	Technical Proposal with CSL Testing Firm qualifications	45 business days before	Start of Drilled Shaft Construction
2	CSL Testing Reports	5 business days after	Completion of testing on an individual drilled shaft
Provide all submittals and reports in .pdf format			

1.4.1 Technical Proposal (Including Example Report)

Submit a technical proposal prepared by the CSL Testing Firm that addresses the testing procedures and required qualifications and experience of the testing firm. Include sufficient documentation to show that the firm and the person overseeing the work on this project meet the requirement of having CSL testing, data interpretation and reporting experience on at least three (3) similar deep foundation projects.

With the technical proposal, include an example CSL test report prepared in accordance with the reporting requirements below. Include any costs associated with the example report in the applicable unit bid prices for CSL testing. If deviations from the specified reporting requirements are noted during review, the Department may (depending on the extent of the deviations) elect to require the testing to confirm that they can meet the requirements in production test reports rather than resubmit the example report. The purposes of this report are for the CSL testing firm to demonstrate their understanding of the reporting requirements and capability to meet them and to ensure that Department personnel are familiar with and understand the testing firm's reporting format and style. The ultimate objective of this requirement is to facilitate timely

reviews of production test reports and reduce the potential for delays in shaft acceptance. Failure to submit an acceptable example report may result in disqualification of the testing firm.

1.4.2 Testing

1. Provide access to the top of the shaft for testing personnel and equipment.
2. Perform CSL testing in accordance with ASTM D 6760.
3. Perform CSL testing on all completed shafts, including a second test when directed by the Engineer. Perform the first test after the shaft concrete has cured a minimum of 72 hours and no more than 10 days (unless directed otherwise by the Engineer) and has obtained a minimum strength of 3000 psi. Perform the second test after the shaft concrete has cured at least 28 days and obtained a minimum strength of 3500 psi. (Based on prior experience with similar shaft diameters, numerous flaws and defects were encountered on shafts tested at about 14 days and significant improvement was noted upon retesting at about 30 to 40 days.) The Department may waive the 28 day CSL testing on some shafts if acceptance can be granted based on the 72-hour to 10-day test results after evaluating the improvement noted between the 72-hour to 10-day and 28-day tests on previously-tested shafts and considering CSL test results. The intent is to perform 28 day testing on the earlier shafts constructed at each pier and eliminate 28 day testing on the later shafts constructed at each pier.
4. Obtain logs as shown below unless directed otherwise by the Engineer.

Substructure Unit	Tubes	Perimeter Logs	Major Diagonal Logs	Minor Diagonal Logs

5. If during testing, it is apparent that tube debonding has occurred, the Contractor may consider flooding the top of the shaft and retesting immediately; it is possible that water may flow into gaps between the tubes and concrete and provide continuity for the sonic waves.
6. If the CSL testing firm or Contractor believes that additional testing is required (such as CSL retesting, Angled CSL, Crosshole Tomography Analysis, or Sonic Echo/Impulse Response, etc.), contact the Engineer immediately. The Department will review the test report(s) to evaluate whether additional testing is required. If the additional testing indicates that any drilled shaft on which additional testing was required is acceptable, the Department will pay for the direct cost of additional testing by change order. If the additional testing or evaluation of cores indicates that the concrete for any drilled shaft concrete is unacceptable, the additional testing will be at the expense of the Contractor. The Department will not pay for additional testing performed at the discretion of the Contractor or testing firm that is not directed and/or agreed upon by the Department.

1.4.3 Test Reports

1. Submit a test report prepared by the CSL Testing Firm within 5 business days of completion of testing which, as a minimum, contains:
   a. Date of test;
   b. Plan Shaft No. and Reference Elevation (i.e. zero depth elevation) and notation of water level in the tubes at the time of testing;
   c. Schematic showing a plan view of the access tube locations;
   d. CSL logs with reference elevations;
   e. CSL logs presented for each tube pair tested with any discontinuity zones indicated on the logs and discussed in the report as appropriate;
   f. Analyses of **both** pulse first arrival time (FAT) versus depth **and** wave speed versus depth;
   g. Include nested signal peak (i.e. “waterfall”) diagrams as a function of time plotted vs. depth. Clearly indicate the FAT picks used to obtain wave speed vs. depth.
   h. Analyses of pulse energy/amplitude versus depth.
   i. Tables which indicate tube pairs, vertical extents, and magnitude (FAT % delay and/or energy decrease) of flaw and defect zones, as defined in Section 1.4.5 of this Special Note.
   j. A narrative portion of the report will be used to present items a thru i.

2. Plot data to a scale that will allow adequate evaluation of data variations. The Department reserves the right to request scale adjustments.
3. Complete all reports using English units.

1.4.4 Evaluation of CSL Test Results

1. Allow direct communication between the CSL Testing Firm and the Department. If the CSL Testing Firm is different than other testing firms on the project, allow direct communication between the CSL and other testing firms.
2. The Department will review the CSL test results in the test report to evaluate whether or not the drilled shaft integrity is acceptable. Within 10 business days after receiving a test report, the Engineer will report to the Contractor whether the construction is acceptable or additional analyses are needed. The Department will also use the results of other non-destructive and materials testing, construction records, etc. to evaluate the condition of the shafts.
3. Continue with construction of the structure above the drilled shafts only after receiving written approval from the Engineer to do so, based on evaluation of the CSL test results and other applicable test results, construction records, etc.
4. If the CSL records are inconclusive (e.g. records do not clearly indicate discontinuity, good conditions or missing data), the Department may require additional testing, such as CSL retesting, Angled CSL, Crosshole Tomography Analysis or concrete cores to sample the concrete in question to verify shaft

conditions. After completing report reviews, the Department will discuss options for additional testing with the Contractor and/or testing firm(s) and/or complete evaluation of all test results prior to directing the Contractor to obtain concrete cores. The Department will not pay for additional testing performed at the discretion of the Contractor or testing firm that is not directed and/or agreed upon by the Department. If core samples are needed, obtain cores with a minimum diameter of 2 inches using a double tube core barrel at a minimum of 4 locations selected by the Department, unless directed otherwise by the Engineer. Unless directed otherwise by the Engineer, locate core holes approximately 6 inches inside the reinforcement such that they do not damage the reinforcement. For each core hole drilled, record a log with descriptions of inclusions and voids in the cored holes and submit a copy of the log to the Engineer. Place the cores in core boxes as shown in Exhibit 10 of the KYTC Geotechnical Guidance Manual properly marked showing the shaft depth at each interval of core recovery. Transport the cores and logs to the Geotechnical Branch in Frankfort for inspection and testing unless directed otherwise by the Engineer. Only after being directed by the Engineer grout the core holes in accordance with Section 1.3.2 above.

5. If the additional testing or evaluation of cores indicate that concrete for any drilled shaft on which additional testing or coring was required is acceptable, the Department will pay for the direct cost of additional testing and concrete coring and grouting by change order. If the additional testing or evaluation of cores indicates that the concrete for any drilled shaft concrete is unacceptable, the additional testing and concrete coring and grouting will be at the expense of the Contractor.
6. If discontinuities are found, an independent structural and/or geotechnical consultant hired by the Contractor will perform structural and/or geotechnical evaluation at the expense of the Contractor. Use consultants who are prequalified by KYTC in applicable areas. Alternatively, the Engineer may require the Department's designer to perform the referenced evaluations and the Department may require the cost of these evaluations to be borne by the Contractor. Based on the design criteria established for the structure and the evaluation, the Engineer will assess the effects of the defects on the structural performance of the drilled shaft. If the results of the analyses indicate that there is conclusive evidence that the discontinuity will result in inadequate or unsafe performance under the design loads, as defined by the design criteria for the structure, the Engineer will reject the shaft.
7. If any shaft is rejected, provide a plan for remedial action to the Department for approval. Any modifications to the foundation shafts and/or other substructure elements caused by the remedial action will require calculations and working drawings by consultant(s) hired by the Contractor (or the Department's designer), at the expense of the Contractor, which will be subject to review by the Department. Begin remediation operations only after receiving approval from the Engineer for the proposed remediation. All remedial action will be at no cost to the Department and with no extension of contract time.

1.4.5. Evaluation Criteria

The Department will generally use the criteria below for evaluation of the shafts but may vary the criteria based on other available information (e.g. CSL results, construction records, etc.)

Satisfactory	Good (G)	FAT increase 0 to 10%
Anomaly	Questionable (Q)	FAT increase 11 to 20%
Flaw	Poor/Flaw (P/F)	FAT increase 21 to 30%
Defect	Poor/Defect (P/D)	FAT increase >31%
The Department will consider energy reductions in conjunction with FAT increases and reserves the right to vary the anomaly, flaw and defect criteria based on energy reductions.		

- Flaws must be addressed if they affect more than 50% of the profiles.
- Defects must be addressed if they affect more than one profile (i.e. the result of complete investigation from bottom to top between two tubes) at the same depth.
- “Addressing” a Flaw or Defect may include an evaluation by tomography if the concern is localized (e.g. not across the full section), and/or, depending on the depth to the concern, additional measures like core drilling, repair or replacement, repeat tests after a longer waiting time or testing by other methods (gamma-gamma, low strain, high strain).
- Flaws or Defects covering the entire cross section define a full layer concern requiring repair.
- Anomalies will require evaluation and may need to be addressed based on the results of the evaluation.

Continue with placement of reinforcement and concrete above the top of shaft only after receiving written approval from the Engineer to do so, based on evaluation of the CSL and other applicable test results.

2.0 Measurement and Payment

2.1 Method of Measurement CSL Testing

The Department will pay for the authorized and accepted quantities of “CSL Testing” at the contract unit price per each shaft tested. This will constitute full compensation for all costs associated with providing access for testing personnel and equipment, performing the CSL Testing in a single shaft, and reporting the results to the Engineer. The Department will pay 50% of the unit price upon successful completion of the required testing and the remainder upon final acceptance of all required reports.

Installation of CSL Access Tubing is incidental to the applicable contract unit bid price for Drilled Shaft, Common, and Drilled Shaft, Solid Rock. This will constitute all costs and delays associated with installing the CSL Access Tubing in a single shaft, including but not limited to providing and installing access tubing, providing and installing all required bracing for access tubes, providing and placing grout in access tubes.

The Department will pay for the direct cost of additional testing and concrete coring, authorized by the Engineer, required to investigate shafts with inconclusive CSL records if evaluation of the additional testing or cores indicates that concrete for that drilled shaft is acceptable using a change order. This will constitute full compensation for all costs and delays associated with performing additional tests, obtaining and delivering concrete cores to the Geotechnical Branch, and grouting core holes.

2.2 Payment

The Department will pay for the completed and accepted quantities under the following. The Pay Unit of “Each” refers to each individual test.

Code	Pay Item	Pay Unit
21321NC	CSL Testing (4 Tubes)	Each

The Department will consider payment as full compensation for all work required herein.

SPECIAL NOTE FOR CONCRETE COATING

I. DESCRIPTION

Perform all work in accordance with the Kentucky Transportation Cabinet, Department of Highways current Specifications for Road and Bridge Construction and applicable Supplemental Specifications, the Standard Drawings, this Note, and the Contract Documents. Section references are to the Standard Specifications.

This work consists of the following:

1. Furnish all labor, materials, tools, equipment, and incidental items necessary to complete the work.
2. Provide safe access to the bridge, in accordance with Section 107.01.01, for the Engineer to sound possible repair areas and for workers to complete the construction.
3. Repair cracks as applicable in accordance with the Special Note for Epoxy Injection Crack Repair.
4. Repair delaminated or spalled areas as applicable in accordance with the Special Note for Concrete Patching.
5. Apply Ordinary Surface Finish
6. Prepare the surfaces to receive coating.
7. Apply concrete coating.
8. Any other work as specified as part of this contract.

II. MATERIALS

One of the following coating systems shall be used:

Manufacturer	***Prime Coat***	***Finish Coat***
Sherwin Williams	Macropoxy 646	Acrolon 218 HS
PPG	Amerlock 2	Devoe Devflex HP
Carboline	Carboguard 890	Carbothane 133 HB
Tnemec	Elastogrip 151	Envirocrete 156

The finish product shall be opaque and satin or semi-gloss. The contractor must apply sufficient coats as required to achieve this goal. The finish coat shall be gray and will meet the following values:

	L*	a*	b*
Gray	74.94	-1.54	3.92

Furnish to the Engineer copies of the manufacturer's technical data sheets, installation guidelines, material safety data sheets, and other pertinent data at least two (2) days prior to beginning the work.

III. CONSTRUCTION

A. **Perform Concrete Repairs.** Repair concrete surface in accordance with the Special Note for Epoxy Injection Crack Repair and/or the Special Note for Concrete Patching Repair if included in the contract documents.

B. **Apply Ordinary Surface Finish.** Areas receiving epoxy injection, concrete patching, and other surface imperfections, including areas of minor cracking, should receive Ordinary Surface Finish in accordance with Section 601.03.18 of the Standard Specifications. Use mortar of the same cement and fine aggregate as the concrete patching, or as directed by the Engineer. Payment will be incidental to Concrete Sealing.

C. **Areas to Receive Concrete Coating:** See structure plans.

D. **Prepare Concrete Surfaces for Repair.** All areas specified shall be pressure washed. Equip the pressure washers with calibrated gages and pressure regulators to ascertain and regulate water pressure. All equipment for pressure washing shall be operated at a minimum pressure of up 3,500 to 4,500 psi with 0 degree spinner tip and/or fan tips as determined by the engineer at the working location with a minimum flow rate of 3.5 gal/minute provided that these pressures do not damage any components of the structure. Pressure and flow rates shall be reduced to a level satisfactory to the Engineer should any damage occur due to power washing procedures. The washing wand must be approximately perpendicular to the washed surface and within a maximum of 12 inches of the surface. Wand extensions greater than 36 inches will be subject to Division of Construction approval. Pressure washing of any bridge element will proceed from top of wash area to bottom of wash area. Preform all pressure washing at temperatures above 40 degrees Fahrenheit.

E. **Apply Concrete Coating.** All areas specified shall have concrete coating applied to as specified after debris removal and power washing. New concrete shall be allowed to properly cure in accordance with the manufacturer's recommendations prior to application. Use compressed air to remove any loose debris from the surfaces that are to be coated after power washing. All coatings shall be applied within manufacturers recommended dry film thickness range. Comply with KYTC "Standard Specifications for Road and Bridge Construction" Section 614.03.02 and coatings supplier recommended conditions for application. Allow the surfaces to be coated to dry a minimum of 24 hours before any coating is applied. The coating must be applied with 72 hours of pressure washing. The coating must be applied to a clean and dry surface.

All coating application shall be executed using brushes, rollers, etc. No spray application will be permitted.

The Department requires acceptance testing of samples obtained on a per-lot basis per-shipment. The Division of Materials shall perform acceptance testing. Test samples shall be taken at the Contractor's paint storage site. Department personnel shall perform sampling. Allow (10) working days for testing and approval of the sampled paint. It is the Contractor's responsibility to maintain an adequate inventory of approved paint. The Department shall assume no responsibility for lost work due to rejection of paint or approved paint subsequently found to be defective during the application process. Perform all concrete coating application at temperatures above 40 degrees Fahrenheit or in accordance with manufactures specifications.

IV. MEASUREMENT

The Department will measure the quantity as lump sum. The Department will not measure preparation of the site for the Engineer's access or removal and reapplication of coatings that do not satisfy the Engineer's approval for payment and will consider them incidental to "Concrete Coating".

V. PAYMENT.

The Department will make payment for the completed and accepted quantities of concrete coating under the following:

Code	***Pay Item***	***Pay Unit***
24982EC	Concrete Coating	Lump Sum

The plans may show an estimate quantity in square feet. The Department will consider payment as full compensation for all work required as described in this note.

SPECIAL NOTE FOR BRIDGE DECK RESTORATION AND WATERPROOFING WITH CONCRETE OVERLAYS

1. DESCRIPTION. Perform all work in accordance with the Kentucky Transportation Cabinet, Department of Highway's Standard Specifications for Road and Bridge Construction and applicable Supplemental Specifications, the Standard Drawings (current editions), this Note, and the attached detail drawings. Section references are to the Standard Specifications. This work consists of the following: (1) Furnish all labor, materials, tools, and equipment, (2) Machine prep the existing slab, (3) Complete full-depth and partial depth repairs as directed by the Engineer, (4) Repair/replace damaged and corroded reinforcing bars, (5) Place new concrete overlay and epoxy-sand slurry in accordance with Section 606, (6) Complete joint replacement operations, and (7) Any other work specified as part of this contract. All construction will be in accordance with Section 606 unless otherwise specified.

2. MATERIALS.

A. Class "AA" Concrete.

B. Class "M" Concrete. Use either "M1" or "M2". See Section 601.

C. Epoxy-Sand Slurry. See Section 606.03.10.

3. CONSTRUCTION.

A. Remove Existing Overlay. In accordance with Section 606.03.03, remove the existing concrete overlay to a depth of 1" by milling.

B. Partial- and Full-Depth Slab Repair. Remove areas determined to be unsound by the Engineer via hydro-demolition or via handheld jackhammers weighing less than 45lbs in accordance with Section 606.02.10B. Repair and replace all damaged or severely corroded reinforcing bars prior to repair operation. The Department will not measure material removal and will consider this work incidental to the bid item "PARTIAL DEPTH PATCHING" or "CONC CLASS M FULL DEPTH PATCH". The Contractor may perform partial-depth patching in conjunction with overlay placement according to Section 606.03.06. However, full-depth patching must be completed prior to overlay placement in accordance with Section 606.03.05.

C. Surface Preparation. After patching has been completed, blast clean all areas to receive overlay and blow with compressed air to remove dust, debris, and foreign particles. Blast cleaning shall be performed within 24 hours prior to placement of the overlay. Should hyrdo-blasting be used in lieu of blast cleaning, Contractor shall take appropriate steps to prevent any exposed reinforcement from rusting in accordance with Section 606.03.04.

D. Mix and Place Overlay. Concrete Class "AA" will be used for the overlay of the existing deck. The blast cleaned surface shall be continuously wetted at least 1 hour prior to placing overlay and covered with polyethylene sheeting to keep the surface clean and maintain a saturated surface-dry (SSD) condition. Polyethylene sheeting shall remain in place until immediately before overlay placement to maintain the saturated condition. As sheeting is removed, Immediately after placement and finishing, the newly placed overlay shall be broomed in accordance with Section 606.03.09.

E. Cleaning and Surface Texturing. After the overlay has cured, blast clean all areas to receive texturing and blow with compressed air to remove dust, debris,

and foreign particles. Allow a minimum 24 hours to dry if using high pressure water for blast cleaning. Texture the concrete surface of the overlay using an epoxy-sand slurry in accordance with Section 606.03.10.

F. Joint Repair. Complete joint repair operations at existing end bents as specified in the Plans in accordance with Section 606.03.11.

G. Verifying Field Conditions. The Contractor shall field verify all dimensions before ordering any material. New material that is unsuitable due to variation in existing structure shall be replaced at the Contractors expense.

H. Damage to the Structure. The Contractor shall bear all responsibility and expense for all damage to the structure during the repair work even to removal and replacement of a fallen span, should the fallen span result from the Contractor's actions.

4. MEASUREMENT. See Section 606 and the following:

A. Class "AA" Concrete. The Department will measure the quantity in cubic yards.

B. Remove Epoxy Bit Foreign Overlay. The Department will measure the removal of the existing overlay in square yards.

C. Partial Depth Patching. The Department will measure the quantity in cubic yards by deducting the theoretical volume of bridge deck overlay from the total volume (as indicated by the batch quantity tickets) of concrete required to obtain the finished grade shown on the plans or established by the Engineer.

D. Concrete Class M Full Depth Patch. The Department will measure the quantity in cubic yards.

E. Steel Reinforcement Epoxy Coated. The Department will measure any reinforcing steel necessary for the partial or full depth patch in pounds.

F. Blast Cleaning (08549). The Department will measure blast cleaning after removal of an existing overlay by square yard.

G. Epoxy Sand Slurry (08504). The Department will measure epoxy sand slurry by square yard.

5. PAYMENT. See Section 606 and the following:

A. Remove Epoxy Bit Foreign Overlay (08510). The Department will make payment for the removal of the existing overlay.

B. Partial Depth Patching (24094EC). The Department will make payment for removing existing materials, furnishing and placing all new materials completed and accepted.

C. Concrete Class M Full Depth Patch (08526). The Department will make payment for removing existing materials, furnishing and placing all new materials.

D. Concrete Class "AA" (08104). The Department will make payment for furnishing and placing all new material as specified.

E. Steel Reinforcement, Epoxy Coated (08151). The Department will make payment for steel reinforcement, if necessary.

F. Blast Cleaning (08549). The Department will make payment for blast cleaning of area where existing overlay has been removed.

G. Epoxy Sand Slurry (08504). The Department will make payment for epoxy sand slurry that is placed per Std. Dwg. BGX-009-04, Figure No. 2.

SPECIAL NOTE FOR BEARING REPLACEMENT

1. DESCRIPTION. Perform all work in accordance with the Kentucky Transportation Cabinet, Department of Highway's Standard Specifications for Road and Bridge Construction and applicable Supplemental Specifications, the Standard Drawings (current editions), this note, and the attached detailed drawings for Bearing Replacement. Section references are to the Standard Specifications. This work consists of the following: (1) Furnish all labor, materials, tools, and equipment. (2) Bearing Replacement. (3) Jack and Support Bridge Span. (4) Maintain and control traffic. (4) Any other work specified as part of this contract.

2. MATERIALS.

A. Structural Steel. ASTM Material, A709 Grade 50 Structural Steel Plates and Shapes. Minimum structural steel yield strength Fy ~ 50,000 psi.

B. Welding. Welding and weld materials are to be in accordance with the Standard Specifications Sections 106, 813 and 607 and unless otherwise noted.

C. Elastomeric Bearings Pads. Type 3E Elastomeric Bearing Pad, see Standard Drawing BBP-001 C.E. and the attached detailed drawings.

D. Expansion Anchors. All expansion anchors shall be 3/4" diameter HILTI KWIK Bolt 3 SS or equal with a working shear capacity of 5.5 kips minimum.

E. Non-Shrink Grout. See Section 601.03.03

F. Cleaning and Painting. See Special Note for Bridge Cleaning and Painting.

3. CONSTRUCTION.

A. Bearing Replacement. Complete bearing replacement as specified in this special note and shown in the attached detailed drawings.

B. Removal. Remove existing bearings as shown on the attached detailed drawings. Dispose of all removed material entirely away from the job site. This work shall be incidental to the unit price bid "Each" for "Bearing Replacement".

C. Expansion Anchors. See attached detailed drawings.

D. Bearing Pads. Set bearing pads in accordance with Section 607.03.17 of the Standard Specification.

E. Jack and Support. Jack and support the beams under full dead and live loads while replacing the bearings. Total Service Load is 156.2 kips per bearing at each end bent. A jack capacity of 312.4 kips or greater per beam for a safety factor of 2.0 per beam line shall be required. All beams at each end bent location shall be jacked simultaneously, and bearings shall be replaced while the bridge is fully opened to traffic. Jacks shall be locked during bearing replacement. The Contractor shall submit his jack and support plan to the Engineer for approval. This plan must be prepared, signed and stamped by a licensed Kentucky professional engineer.

F. Cleaning and Painting.

Existing Steel. All existing faying surfaces where new steel is to be installed shall be cleaned and receive the prime coat as specified in Special Note for Bridge Cleaning and Painting. Level of cleaning shall be to an SSPC-SP 15 (Commercial Grade Power Tool Cleaning). All Power tools shall be equipped with vacuum shrouds and fitted with HEPA filters at their air exhausts. Maintain and operate all vacuum shrouded power tools to collect generated debris.

New Structural Steel. All new structural steel shall receive shop surface preparation and shop applied prime coating as specified in Special Note for Bridge Cleaning and Painting. Necessary touch up/repair of the shop applied prime coat on the new steel may be performed in the field. Intermediate and Finish coatings specified shall be field applied.

Payment. All items necessary to complete cleaning and painting as specified in this note shall be considered incidental to the unit price bid "Each" for Bearing Replacement.

G. **Field Welding.** Field welding will not be permitted except as shown on the detail drawings or as directed by the Engineer.

H. **Residual Lead.** Residual lead paint may still be on bridge. The Contractor is advised to take all necessary protective measures including worker safety and environmental regulations when performing surface preparation and other work. The Department will not consider any claims based on residual lead paint.

I. **Verifying Field Conditions.** The Contractor shall field verify all plate and shape dimensions, bolt patterns and locations before ordering any material. New material that is unsuitable due to variation in existing structure shall be replaced at the Contractors expense.

J. **Damage to the structure.** The Contractor shall bear all responsibility and expense for any and all damage to the structure during the repair work, even to the removal and replacement of a fallen span, should the fallen span result from the Contractors actions.

4. MEASUREMENT.

A. **Bearing Replacement.** The Department will measure the quantity as "Each" for Bearing Replacement.

B. **Jack and Support Bridge Span.** The Department will measure the quantity as "Lump Sum" for Jack and Support Bridge Span.

5. PAYMENT.

A. **Bearing Replacement (21969NN).** Payment at the contract unit price for "Each" is full compensation for furnishing and installing all material as specified,

B. **Jack and Support Bridge Span (08435).** Payment at the contact "Lump Sum" includes all items necessary to jack and support bridge span as specified.

SPECIAL PROVISION FOR EMBANKMENT AT BRIDGE END BENT STRUCTURES

This Special Provision will apply when indicated on the plans or in the proposal. Section references herein are to the Department's Standard Specifications for Road and Bridge Construction, Current Edition.

1.0 DESCRIPTION. Construct a soil, granular, or rock embankment with soil, granular or cohesive pile core and place structure granular backfill, as the Plans require. Construct the embankment according to the requirements of this Special Provision, the Plans, Standard Drawing RGX 100 and 105, and the Standard Specifications, Current Edition.

2.0 MATERIALS.

2.1 Granular Embankment. Conform to Subsection 805.10. When Granular Embankment materials are erodible or unstable according to Subsection 805.03.04, use the Special Construction Methods found in 3.2 of the Special Provision.

2.2 Rock Embankment. Provide durable rock from roadway excavation that consists principally of Unweathered Limestone, Durable Shale (SDI equal to or greater than 95 according to KM 64-513), or Durable Sandstone.

2.3 Pile Core. Provide a pile core in the area of the embankments where deep foundations are to be installed unless otherwise specified. The Pile Core is the zone indicated on Standard Drawings RGX 100 and 105 designated as Pile Core. Material control of the pile core area during embankment construction is always required. Proper Pile Core construction is required for installation of foundation elements such as drilled or driven piles or drilled shafts. The type of material used to construct the pile core is as directed in the plans or below. Typically, the pile core area will be constructed from the same material used to construct the surrounding embankment. Pile Core can be classified as one of three types:

A) Pile Core - Conform to Section 206 of the Standard Specifications. Provide pile core material consisting of the same material as the adjacent embankment except the material in the pile core area shall be free of boulders or particle sizes larger than 4 inches in any dimension or any other obstructions that may hinder pile driving operations. If the pile core material hinders pile driving operations, take the appropriate means necessary to reach the required pile tip elevation, at no expense to the Department.

B) Granular Pile Core. Granular pile core is required only when specified in the plans. Select a gradation of durable rock to facilitate pile driving that conforms to Subsection 805.11. If granular pile core material hinders pile driving operations, take appropriate means necessary to reach the required pile tip elevation, at no expense to the Department.

C) Cohesive Pile Core. Cohesive Pile Core is required only when specified in the plans. Conform to Section 206 of the Standard Specifications and use soil with at least 50 percent passing a No. 4 sieve having a minimum Plasticity Index (PI) of 10. In addition, keep the cohesive pile core free of boulders, larger than 4 inches in any dimension, or any other obstructions, which would interfere with drilling operations. If cohesive pile core material interferes with drilling operations, take appropriate means necessary to maintain

excavation stability, at no expense to the Department.

2.4 Structure Granular Backfill. Conform to Subsection 805.11

2.5 Geotextile Fabric. Conform to Type I or Type IV in Section 214 and 843.

3.0 CONSTRUCTION.

3.1 General. Construct roadway embankments at end bents according to Section 206 and in accordance with the Special Provision, the Plans, and Standard Drawings for the full embankment section. In some instances, granular or rock embankment will be required for embankment construction for stability purposes, but this special provision does not prevent the use of soil when appropriate. Refer to the plans for specific details regarding material requirements for embankment construction.

Place and compact the pile core and structure granular backfill according to the applicable density requirements for the project. If the embankment and pile core are dissimilar materials (i.e., a granular pile core is used with a soil embankment or a cohesive pile core is used with a granular embankment), a Geotextile Fabric, Type IV, will be required between the pile core and embankment in accordance with Sections 214 and 843 of the Standard Specifications.

When granular or rock embankment is required for embankment construction, conform to the general requirements of Subsection 206.03.02 B. In addition, place the material in no greater than 2-foot loose lifts and compact with a vibrating smooth wheel roller capable of producing a minimum centrifugal force of 15 tons. Apply these requirements to the full width of the embankment for a distance of half the embankment height or 50 feet, whichever is greater, as shown on Standard Drawing RGX-105.

When using granular pile core, install 8-inch perforated underdrain pipe at or near the elevation of the original ground in the approximate locations depicted on the standard drawing, and as the Engineer directs, to ensure positive drainage of the embankment. Wrap the perforated pipe with a fabric of a type recommended by the pipe manufacturer.

After constructing the embankment, excavate for the end bent cap, drive piling, install shafts or other foundation elements, place the mortar bed, construct the end bent, and complete the embankment to finish grade according to the construction sequence shown on the Plans or Standard Drawings and as specified hereinafter.

Certain projects may require widening of existing embankments and the removal of substructures. Construct embankment according to the plans. Substructure removal shall be completed according to the plans and Section 203. Excavation may be required at the existing embankment in order to place the structure granular backfill as shown in the Standard Drawings.

After piles are driven or shafts installed (see design drawings), slope the bottom of the excavation towards the ends of the trench as noted on the plans for drainage. Using a separate pour, place concrete mortar, or any class concrete, to provide a base for forming and placing the cap. Place side forms for the end bent after the mortar has set sufficiently to support workmen and forms without being disturbed.

Install 4-inch perforated pipe in accordance with the plans and Standard Drawings. In the event slope protection extends above the elevation of the perforated pipe, extend the pipe through the slope protection.

After placing the end bent cap and achieving required concrete cylinder strengths, remove adjacent forms and fill the excavation with compacted structure granular backfill material (maximum 1’ loose lifts) to the level of the berm prior to placing beams for the bridge. Place Type IV geotextile fabric between embankment material and structure granular backfill. After completing the end bent backwall, or after completing the span end

wall, place the compacted structure granular backfill (maximum 1' loose lifts) to subgrade elevation. If the original excavation is enlarged, fill the entire volume with compacted structure granular backfill (maximum 1' loose lifts) at no expense to the Department. Do not place backfill before removing adjacent form work. Place structure granular backfill material in trench ditches at the ends of the excavation. Place Geotextile Fabric, Type IV over the surface of the compacted structure granular backfill prior to placing aggregate base course.

Tamp the backfill with hand tampers, pneumatic tampers, or other means approved by the Engineer. Thoroughly compact the backfill under the overhanging portions of the structure to ensure that the backfill is in intimate contact with the sides of the structure.

Do not apply seeding, sodding, or other vegetation to the exposed granular embankment.

3.2 Special Construction Methods. Erodible or unstable materials may erode even when protected by riprap or channel lining; use the special construction method described below when using these materials.

Use fine aggregates or friable sandstone granular embankment at "dry land" structures only. Do not use them at stream crossings or locations subject to flood waters.

For erodible or unstable materials having 50 percent or more passing the No. 4 sieve, protect with geotextile fabric. Extend the fabric from the original ground to the top of slope over the entire area of the embankment slopes on each side of, and in front of, the end bent. Cover the fabric with at least 12 inches of non-erodible material.

For erodible or unstable materials having less than 50 percent passing a No. 4 sieve, cover with at least 12 inches of non-erodible material.

Where erodible or unstable granular embankment will be protected by riprap or channel lining, place Type IV geotextile fabric between the embankment and the specified slope protection.

4.0 MEASUREMENT.

4.1 Granular Embankment. The Department will measure the quantity in cubic yards using the plan quantity, increased or decreased by authorized adjustments as specified in Section 204. The Department will not measure for payment any Granular Embankment that is not called for in the plans.

The Department will not measure for payment any special construction caused by using erodible or unstable materials and will consider it incidental to the Granular Embankment regardless of whether the erodible or unstable material was specified or permitted.

4.2 Rock Embankment. The Department will not measure for payment any rock embankment and will consider it incidental to roadway excavation or embankment in place, as applicable. Rock embankments will be constructed using granular embankment on projects where there is no available rock present within the excavation limits of the project.

4.3 Pile Core. Pile core will be measured and paid under roadway excavation or embankment in place, as applicable. The Department will not measure the pile core for separate payment. The Department will not measure for payment the 8-inch perforated underdrain pipe and will consider it incidental to the Pile Core.

4.4 Structure Granular Backfill. The Department will measure the quantity in cubic yards using the plan quantity, increased or decreased by authorized adjustments as specified in Section 204. The Department will not measure any additional material required for backfill outside the limits shown on the Plans and Standard Drawings for payment and will

consider it incidental to the work.

The Department will not measure for payment the 4-inch perforated underdrain pipe and will consider it incidental to the Structure Granular Backfill.

4.5 Geotextile Fabric. The Department will not measure the quantity of fabric used for separating dissimilar materials when constructing the embankment and pile core and will consider it incidental to embankment construction.

The Department will not measure for payment the Geotextile Fabric used to separate the Structure Granular Backfill from the embankment and aggregate base course and will consider it incidental to Structure Granular Backfill.

The Department will not measure for payment the Geotextile Fabric required for construction with erodible or unstable materials and will consider it incidental to embankment construction.

4.6 End Bent. The Department will measure the quantities according to the Contract. The Department will not measure furnishing and placing the 2-inch mortar or concrete bed for payment and will consider it incidental to the end bent construction.

4.7 Structure Excavation. The Department will not measure structure excavation on new embankments for payment and will consider it incidental to the Structure Granular Backfill or Concrete as applicable.

5.0 PAYMENT. The Department will make payment for the completed and accepted quantities under the following:

Code	Pay Item	Pay Unit
02223	Granular Embankment	Cubic Yards
02231	Structure Granular Backfill	Cubic Yards

The Department will consider payment as full compensation for all work required in this provision.

September 16, 2016

MATERIAL SUMMARY

CONTRACT ID: 251016 **121GR25D016-NHPP** **DE06300752516**

I-75 TENNESSEE STATE LINE-LEXINGTON PRIORITY SECTION OF WIDENING 1-75 FROM MP 23.2 IN WHITLEY COUNTY TO MP 28.90 US-25E NORTH OF CORBIN GRADE DRAIN & SURFACE WITH BRIDGE, A DISTANCE OF 5.9 MILES.

Project Line No	Bid Code	DESCRIPTION	Quantity	Unit
0005	00001	DGA BASE	35,412.00	TON
0010	00008	CEMENT STABILIZED ROADBED	22,213.00	SQYD
0015	00018	DRAINAGE BLANKET-TYPE II-ASPH	23,566.00	TON
0020	00100	ASPHALT SEAL AGGREGATE	153.00	TON
0025	00103	ASPHALT SEAL COAT	18.00	TON
0030	00190	LEVELING & WEDGING PG64-22	8,271.00	TON
0035	00214	CL3 ASPH BASE 1.00D PG64-22	9,656.00	TON
0040	00217	CL4 ASPH BASE 1.00D PG64-22	4,556.00	TON
0045	00219	CL4 ASPH BASE 1.00D PG76-22	8,866.00	TON
0050	00339	CL3 ASPH SURF 0.38D PG64-22	3,871.00	TON
0055	00342	CL4 ASPH SURF 0.38A PG76-22	4,404.00	TON
0060	00358	ASPHALT CURING SEAL	40.00	TON
0065	02542	CEMENT	484.00	TON
0070	02676	MOBILIZATION FOR MILL & TEXT	1.00	LS
0075	02677	ASPHALT PAVE MILLING & TEXTURING	3,142.00	TON
0080	02702	SAND FOR BLOTTER	124.00	TON
0085	24904EC	CL3 ASPH BASE CK PG64-22	5,319.00	TON
0090	24905EC	CL4 ASPH BASE CK PG64-22	6,059.00	TON
0095	24970EC	ASPHALT MATERIAL FOR TACK NON-TRACKING	116.00	TON
0100	00078	CRUSHED AGGREGATE SIZE NO 2 (REVISED 7-23-25)	6,834.00	TON
0105	01000	PERFORATED PIPE-4 IN	11,764.00	LF
0110	01001	PERFORATED PIPE-6 IN	3,166.00	LF
0115	01010	NON-PERFORATED PIPE-4 IN	420.00	LF
0120	01011	NON-PERFORATED PIPE-6 IN	120.00	LF
0125	01015	INSPECT & CERTIFY EDGE DRAIN SYSTEM - LAUREL	1.00	LS
0130	01020	PERF PIPE HEADWALL TY 1-4 IN	23.00	EACH
0135	01028	PERF PIPE HEADWALL TY 3-4 IN	7.00	EACH
0140	01032	PERF PIPE HEADWALL TY 4-4 IN	3.00	EACH
0145	01033	PERF PIPE HEADWALL TY 4-6 IN	1.00	EACH
0150	01740	CORED HOLE DRAINAGE BOX CON-4 IN	1.00	EACH
0155	01741	CORED HOLE DRAINAGE BOX CON-6 IN	9.00	EACH
0160	01978	CONC MEDIAN BARRIER TYPE A TL5 56 IN (REVISED 7-23-25)	3,229.00	LF
0165	01982	DELINEATOR FOR GUARDRAIL MONO DIRECTIONAL WHITE	96.00	EACH
0170	01983	DELINEATOR FOR GUARDRAIL MONO DIRECTIONAL YELLOW	2.00	EACH
0175	01984	DELINEATOR FOR BARRIER - WHITE	138.00	EACH
0180	01985	DELINEATOR FOR BARRIER - YELLOW	154.00	EACH
0185	01986	DELINEATOR FOR BARRIER WALL-B/Y	55.00	EACH
0190	02002	REMOVE TEMP CONC BARRIER WALL	575.00	LF
0195	02003	RELOCATE TEMP CONC BARRIER	8,044.00	LF
0200	02014	BARRICADE-TYPE III	4.00	EACH
0205	02159	TEMP DITCH	2,827.00	LF
0210	02160	CLEAN TEMP DITCH	1,414.00	LF

MATERIAL SUMMARY

Project Line No	Bid Code	DESCRIPTION	Quantity	Unit
0215	02200	ROADWAY EXCAVATION	134,671.00	CUYD
0220	02242	WATER	1,779.00	MGAL
0225	02268	REMOVE & REPLACE FENCE	9,667.00	LF
0230	02351	GUARDRAIL-STEEL W BEAM-S FACE	7,275.00	LF
0235	02367	GUARDRAIL END TREATMENT TYPE 1	6.00	EACH
0240	02369	GUARDRAIL END TREATMENT TYPE 2A	6.00	EACH
0245	02381	REMOVE GUARDRAIL	5,562.00	LF
0250	02545	CLEARING AND GRUBBING - 30.89 ACRES- LAUREL	1.00	LS
0255	02555	CONCRETE-CLASS B	4.60	CUYD
0260	02562	TEMPORARY SIGNS	248.00	SQFT
0265	02585	EDGE KEY	285.00	LF
0270	02607	FABRIC-GEOTEXTILE CLASS 2 FOR PIPE	1,800.00	SQYD
0275	02650	MAINTAIN & CONTROL TRAFFIC - LAUREL	1.00	LS
0280	02671	PORTABLE CHANGEABLE MESSAGE SIGN	4.00	EACH
0285	02696	SHOULDER RUMBLE STRIPS	25,187.00	LF
0290	02701	TEMP SILT FENCE	2,827.00	LF
0295	02703	SILT TRAP TYPE A	33.00	EACH
0300	02704	SILT TRAP TYPE B	33.00	EACH
0305	02705	SILT TRAP TYPE C	33.00	EACH
0310	02706	CLEAN SILT TRAP TYPE A	33.00	EACH
0315	02707	CLEAN SILT TRAP TYPE B	33.00	EACH
0320	02708	CLEAN SILT TRAP TYPE C	33.00	EACH
0325	02726	STAKING - LAUREL	1.00	LS
0330	02731	REMOVE STRUCTURE - US 25E EXISTING STRUCTURE- LAUREL	1.00	LS
0335	02775	ARROW PANEL	4.00	EACH
0340	02898	RELOCATE CRASH CUSHION	3.00	EACH
0345	03171	CONC BARRIER WALL TYPE 9T	12,555.00	LF
0350	05950	EROSION CONTROL BLANKET	321.00	SQYD
0355	05952	TEMP MULCH	107,758.00	SQYD
0360	05953	TEMP SEEDING AND PROTECTION	80,147.00	SQYD
0365	05963	INITIAL FERTILIZER	5.00	TON
0370	05964	MAINTENANCE FERTILIZER	8.30	TON
0375	05985	SEEDING AND PROTECTION	160,833.00	SQYD
0380	05992	AGRICULTURAL LIMESTONE	99.70	TON
0385	06511	PAVE STRIPING-TEMP PAINT-6 IN	42,005.00	LF
0390	06511	PAVE STRIPING-TEMP PAINT-6 IN	39,823.00	LF
0395	06542	PAVE STRIPING-THERMO-6 IN W	22,834.00	LF
0400	06543	PAVE STRIPING-THERMO-6 IN Y	14,469.00	LF
0405	06546	PAVE STRIPING-THERMO-12 IN W	1,784.00	LF
0410	06549	PAVE STRIPING-TEMP REM TAPE-B	24,807.00	LF
0415	06556	PAVE STRIPING-DUR TY 1-6 IN W	609.00	LF
0420	06557	PAVE STRIPING-DUR TY 1-6 IN Y	406.00	LF
0425	06568	PAVE MARKING-THERMO STOP BAR-24IN	108.00	LF
0430	06569	PAVE MARKING-THERMO CROSS-HATCH	319.00	SQFT
0435	06574	PAVE MARKING-THERMO CURV ARROW	33.00	EACH
0440	06578	PAVE MARKING-THERMO MERGE ARROW	6.00	EACH
0445	06589	PAVEMENT MARKER TYPE V-MW	19.00	EACH
0450	06610	INLAID PAVEMENT MARKER-MW	52.00	EACH
0455	06611	INLAID PAVEMENT MARKER-MY	26.00	EACH

MATERIAL SUMMARY

Project Line No	Bid Code	DESCRIPTION	Quantity	Unit
0460	06613	INLAID PAVEMENT MARKER-B W/R	287.00	EACH
0465	06614	INLAID PAVEMENT MARKER-B Y/R	305.00	EACH
0470	08902	CRASH CUSHION TY VI CLASS B TL3	3.00	EACH
0475	08909	CRASH CUSHION TY VI CLASS D TL3	1.00	EACH
0480	10020NS	FUEL ADJUSTMENT	170,230.00	DOLL
0485	10030NS	ASPHALT ADJUSTMENT	272,173.00	DOLL
0490	20191ED	OBJECT MARKER TY 3	5.00	EACH
0495	20550ND	SAWCUT PAVEMENT	10,700.00	LF
0500	22664EN	WATER BLASTING EXISTING STRIPE	1,171.00	LF
0505	23274EN11F	TURF REINFORCEMENT MAT 1	1,663.00	SQYD
0510	23875NC	REMOVE THERMOPLASTIC ARROWS	6.00	EACH
0515	23929EC	LIGHTWEIGHT AGGREGATE FILL	1,256.00	CUYD
0520	24255EC	REMOVE CABLE GUARDRAIL BARRIER SYSTEM	3,027.00	LF
0525	24640ED	OBJECT MARKER TYPE 1	1.00	EACH
0530	24679ED	PAVE MARK THERMO CHEVRON	353.00	SQFT
0535	24779EC	INTELLIGENT COMPACTION FOR SOIL	90,000.00	CUYD
0540	24780EC	INTELLIGENT COMPACTION FOR AGGREGATE	35,347.00	TON
0545	24781EC	INTELLIGENT COMPACTION FOR ASPHALT	76,993.00	TON
0550	24891EC	PAVE MOUNT INFRARED TEMP EQUIPMENT	3,222,645.00	SF
0555	25075EC	QUEUE PROTECTION VEHICLE	400.00	HOUR
0560	25078ED	THRIE BEAM GUARDRAIL TRANSITION TL-3	6.00	EACH
0565	25079ED	THRIE BEAM GUARDRAIL TRANSITION TL-2	2.00	EACH
0570	25117EC	FURNISH QUEUE PROTECTION VEHICLES	12.00	MONT
0575	26136EC	PORTABLE QUEUE WARNING ALERT SYSTEM	6.00	MONT
0580	26137EC	QUEUE WARNING PCMS	36.00	MONT
0585	26138EC	QUEUE WARNING PORTABLE RADAR SENSORS	36.00	MONT
0590	26248EC	ELECTRONIC DELIVERY MGMT SYSTEM - AGG - LAUREL	1.00	LS
0595	00461	CULVERT PIPE-15 IN	99.00	LF
0600	00462	CULVERT PIPE-18 IN	71.00	LF
0605	00464	CULVERT PIPE-24 IN	41.00	LF
0610	00469	CULVERT PIPE-42 IN	11.00	LF
0615	00521	STORM SEWER PIPE-15 IN	352.00	LF
0620	00522	STORM SEWER PIPE-18 IN	61.00	LF
0625	01202	PIPE CULVERT HEADWALL-15 IN	5.00	EACH
0630	01204	PIPE CULVERT HEADWALL-18 IN	3.00	EACH
0635	01208	PIPE CULVERT HEADWALL-24 IN	2.00	EACH
0640	01214	PIPE CULVERT HEADWALL-42 IN	1.00	EACH
0645	01310	REMOVE PIPE	659.00	LF
0650	01480	CURB BOX INLET TYPE B	6.00	EACH
0655	01505	DROP BOX INLET TYPE 5B	1.00	EACH
0660	01624	CONC MED BARR BOX INLET TY B2 TL5 56	8.00	EACH
0665	01641	JUNCTION BOX-15 IN	2.00	EACH
0670	01642	JUNCTION BOX-18 IN	1.00	EACH
0675	24861EC	PVC FOLD AND FORM PIPE LINER-15 IN	942.00	LF
0680	24862EC	PVC FOLD AND FORM PIPE LINER-18 IN	184.00	LF
0685	24863EC	PVC FOLD AND FORM PIPE LINER-24 IN	565.00	LF
0690	24864EC	PVC FOLD AND FORM PIPE LINER-30 IN	309.00	LF
0695	26168EC	PVC FOLD AND FORM PIPE LINER-42 IN	175.00	LF
0700	01978	CONC MEDIAN BARRIER TYPE A TL5 56 IN	204.00	LF

MATERIAL SUMMARY

Project Line No	Bid Code	DESCRIPTION	Quantity	Unit
0705	02231	STRUCTURE GRANULAR BACKFILL	366.00	CUYD
0710	03299	ARMORED EDGE FOR CONCRETE	251.20	LF
0715	08003	FOUNDATION PREPARATION	1.00	LS
0720	08020	CRUSHED AGGREGATE SLOPE PROT	648.00	TON
0725	08033	TEST PILES	55.00	LF
0730	08046	PILES-STEEL HP12X53	840.00	LF
0735	08094	PILE POINTS-12 IN	40.00	EACH
0740	08100	CONCRETE-CLASS A	813.60	CUYD
0745	08104	CONCRETE-CLASS AA	845.20	CUYD
0750	08140	MECHANICAL REINF COUPLER #5 EPOXY COATED - (REVISED 7-15-25)	1,686.00	EACH
0755	08151	STEEL REINFORCEMENT-EPOXY COATED	424,236.00	LB
0760	08669	PRECAST PC BOX BEAM SB21	3,176.00	LF
0765	20637ED	DRILLED SHAFT-ROCK 48 IN	243.00	LF
0770	20743ED	DRILLED SHAFT 54 IN-SOLID ROCK	168.00	LF
0775	20745ED	ROCK SOUNDINGS	264.80	LF
0780	20746ED	ROCK CORINGS	609.00	LF
0785	21321NC	CSL TESTING (4 TUBES)	27.00	EACH
0790	22417EN	DRILLED SHAFT-54 IN-COMMON	120.00	LF
0795	23378EC	CONCRETE SEALING	50,662.00	SQFT
0800	24405EC	MECHANICAL REINF COUPLER #8-EPOXY COATED - (REVISED 7-15-25)	34.00	EACH
0805	25028ED	RAIL SYSTEM SINGLE SLOPE - 40 IN	407.00	LF
0810	02403	REMOVE CONCRETE MASONRY	12.50	CUYD
0815	08002	STRUCTURE EXCAV-SOLID ROCK	13.00	CUYD
0820	08003	FOUNDATION PREPARATION	1.00	LS
0825	08100	CONCRETE-CLASS A	31.00	CUYD
0830	08150	STEEL REINFORCEMENT	3,307.00	LB
0835	04903	REFERENCE MARKER	8.00	EACH
0840	06400	GMSS GALV STEEL TYPE A	5,556.00	LB
0845	06405	SBM ALUMINUM PANEL SIGNS	1,948.60	SQFT
0850	06406	SBM ALUM SHEET SIGNS .080 IN	23.00	SQFT
0855	06407	SBM ALUM SHEET SIGNS .125 IN	231.00	SQFT
0860	06410	STEEL POST TYPE 1	520.00	LF
0865	06412	STEEL POST MILE MARKERS	2.00	EACH
0870	06441	GMSS GALV STEEL TYPE C	3,111.00	LB
0875	06478	OSS GALV STEEL 75 FT TRUSS	1.00	EACH
0880	06480	OSS GALV STEEL 85 FT TRUSS	1.00	EACH
0885	06490	CLASS A CONCRETE FOR SIGNS	107.13	CUYD
0890	06491	STEEL REINFORCEMENT FOR SIGNS	8,437.00	LB
0895	20419ND	ROADWAY CROSS SECTION	10.00	EACH
0900	20912ND	BARRIER WALL POST	4.00	EACH
0905	21596ND	GMSS TYPE D	6.00	EACH
0910	24631EC	BARCODE SIGN INVENTORY	27.00	EACH
0915	02568	MOBILIZATION	1.00	LS
0920	02569	DEMOBILIZATION	1.00	LS
0925	20411ED	LAW ENFORCEMENT OFFICER - (ADDED 7-15-25)	800.00	HOUR
0935	26233EC	MOBILIZATION FOR CONCRETE SURF TREATMENT - (REVISED 7-23-25)	1.00	LS
0940	02603	FABRIC-GEOTEXTILE CLASS 2 - (ADDED 7-23-25)	8,960.00	SQYD

MATERIAL SUMMARY

CONTRACT ID: 251016 **121GR25D016-NHPP** **DE11800752516**

I-75 TENNESSEE STATE LINE-LEXINGTON PRIORITY SECTION OF WIDENING 1-75 FROM MP 23.2 IN WHITLEY COUNTY TO MP 28.90 US-25E NORTH OF CORBIN GRADE DRAIN & SURFACE WITH BRIDGE, A DISTANCE OF 5.9 MILES.

Project Line No	Bid Code	DESCRIPTION	Quantity	Unit
0925	00001	DGA BASE	149,785.00	TON
0930	00008	CEMENT STABILIZED ROADBED	152,287.00	SQYD
0935	00018	DRAINAGE BLANKET-TYPE II-ASPH	105,117.00	TON
0940	00100	ASPHALT SEAL AGGREGATE	675.00	TON
0945	00103	ASPHALT SEAL COAT	82.10	TON
0950	00190	LEVELING & WEDGING PG64-22	28,433.00	TON
0955	00212	CL2 ASPH BASE 1.00D PG64-22	1,076.00	TON
0960	00214	CL3 ASPH BASE 1.00D PG64-22	42,524.00	TON
0965	00217	CL4 ASPH BASE 1.00D PG64-22	19,971.00	TON
0970	00219	CL4 ASPH BASE 1.00D PG76-22	38,634.00	TON
0975	00301	CL2 ASPH SURF 0.38D PG64-22	345.00	TON
0980	00339	CL3 ASPH SURF 0.38D PG64-22	15,186.00	TON
0985	00342	CL4 ASPH SURF 0.38A PG76-22	19,193.00	TON
0990	00358	ASPHALT CURING SEAL	177.00	TON
0995	02542	CEMENT	3,317.00	TON
1000	02676	MOBILIZATION FOR MILL & TEXT - WHITLEY	1.00	LS
1005	02677	ASPHALT PAVE MILLING & TEXTURING	11,506.00	TON
1010	02702	SAND FOR BLOTTER	553.00	TON
1015	24904EC	CL3 ASPH BASE CK PG64-22	24,232.00	TON
1020	24905EC	CL4 ASPH BASE CK PG64-22	26,549.00	TON
1025	24970EC	ASPHALT MATERIAL FOR TACK NON-TRACKING	509.00	TON
1030	00078	CRUSHED AGGREGATE SIZE NO 2 (REVISED 7-23-25)	13,430.00	TON
1035	01000	PERFORATED PIPE-4 IN	46,883.00	LF
1040	01001	PERFORATED PIPE-6 IN	22,198.00	LF
1045	01010	NON-PERFORATED PIPE-4 IN	1,584.00	LF
1050	01011	NON-PERFORATED PIPE-6 IN	624.00	LF
1055	01015	INSPECT & CERTIFY EDGE DRAIN SYSTEM - WHITLEY	1.00	LS
1060	01020	PERF PIPE HEADWALL TY 1-4 IN	68.00	EACH
1065	01028	PERF PIPE HEADWALL TY 3-4 IN	19.00	EACH
1070	01032	PERF PIPE HEADWALL TY 4-4 IN	41.00	EACH
1075	01033	PERF PIPE HEADWALL TY 4-6 IN	2.00	EACH
1080	01740	CORED HOLE DRAINAGE BOX CON-4 IN	1.00	EACH
1085	01741	CORED HOLE DRAINAGE BOX CON-6 IN	50.00	EACH
1090	01978	CONC MEDIAN BARRIER TYPE A TL5 56 IN (REVISED 7-23-25)	21,650.00	LF
1095	01982	DELINEATOR FOR GUARDRAIL MONO DIRECTIONAL WHITE	386.00	EACH
1100	01983	DELINEATOR FOR GUARDRAIL MONO DIRECTIONAL YELLOW	14.00	EACH
1105	01984	DELINEATOR FOR BARRIER - WHITE	626.00	EACH
1110	01985	DELINEATOR FOR BARRIER - YELLOW	701.00	EACH
1115	01986	DELINEATOR FOR BARRIER WALL-B/Y	251.00	EACH
1120	02003	RELOCATE TEMP CONC BARRIER	36,646.00	LF
1125	02014	BARRICADE-TYPE III	4.00	EACH

MATERIAL SUMMARY

Project Line No	Bid Code	DESCRIPTION	Quantity	Unit
1130	02159	TEMP DITCH	15,654.00	LF
1135	02160	CLEAN TEMP DITCH	7,826.00	LF
1140	02200	ROADWAY EXCAVATION	745,001.00	CUYD
1145	02242	WATER	7,123.00	MGAL
1150	02262	FENCE-WOVEN WIRE TYPE 1	1,921.00	LF
1155	02265	REMOVE FENCE	1,830.00	LF
1160	02268	REMOVE & REPLACE FENCE	48,750.00	LF
1165	02351	GUARDRAIL-STEEL W BEAM-S FACE	30,250.00	LF
1170	02360	GUARDRAIL TERMINAL SECTION NO 1	2.00	EACH
1175	02367	GUARDRAIL END TREATMENT TYPE 1	25.00	EACH
1180	02369	GUARDRAIL END TREATMENT TYPE 2A	25.00	EACH
1185	02381	REMOVE GUARDRAIL	27,547.00	LF
1190	02429	RIGHT-OF-WAY MONUMENT TYPE 1	15.00	EACH
1195	02432	WITNESS POST	15.00	EACH
1200	02484	CHANNEL LINING CLASS III	553.00	TON
1205	02545	CLEARING AND GRUBBING - 123.55 ACRES- WHITLEY	1.00	LS
1210	02555	CONCRETE-CLASS B	20.50	CUYD
1215	02562	TEMPORARY SIGNS	764.40	SQFT
1220	02585	EDGE KEY	308.00	LF
1225	02607	FABRIC-GEOTEXTILE CLASS 2 FOR PIPE	9,236.00	SQYD
1230	02650	MAINTAIN & CONTROL TRAFFIC - WHITLEY	1.00	LS
1235	02671	PORTABLE CHANGEABLE MESSAGE SIGN	6.00	EACH
1240	02696	SHOULDER RUMBLE STRIPS	107,964.00	LF
1245	02701	TEMP SILT FENCE	15,654.00	LF
1250	02703	SILT TRAP TYPE A	121.00	EACH
1255	02704	SILT TRAP TYPE B	121.00	EACH
1260	02705	SILT TRAP TYPE C	121.00	EACH
1265	02706	CLEAN SILT TRAP TYPE A	121.00	EACH
1270	02707	CLEAN SILT TRAP TYPE B	121.00	EACH
1275	02708	CLEAN SILT TRAP TYPE C	121.00	EACH
1280	02726	STAKING - WHITLEY	1.00	LS
1285	02731	REMOVE STRUCTURE - I-75 N.B. LYNN CAMP CREEK EXISTING STRUCTURE-WHITLEY	1.00	LS
1290	02731	REMOVE STRUCTURE - I-75 S.B. LYNN CAMP CREEK EXISTING STRUCTURE-WHITLEY	1.00	LS
1295	02731	REMOVE STRUCTURE - KY 1259 EXISTING STRUCTURE- WHITLEY	1.00	LS
1300	02731	REMOVE STRUCTURE - KY 312 EXISTING STRUCTURE-WHITLEY	1.00	LS
1305	02775	ARROW PANEL	4.00	EACH
1310	02898	RELOCATE CRASH CUSHION	4.00	EACH
1315	03171	CONC BARRIER WALL TYPE 9T	57,500.00	LF
1320	03225	TUBULAR MARKERS	96.00	EACH
1325	05950	EROSION CONTROL BLANKET	862.00	SQYD
1330	05952	TEMP MULCH	393,060.00	SQYD
1335	05953	TEMP SEEDING AND PROTECTION	293,598.00	SQYD
1340	05963	INITIAL FERTILIZER	18.00	TON
1345	05964	MAINTENANCE FERTILIZER	30.40	TON
1350	05985	SEEDING AND PROTECTION	586,657.00	SQYD
1355	05992	AGRICULTURAL LIMESTONE	363.60	TON
1360	06511	PAVE STRIPING-TEMP PAINT-6 IN	191,358.00	LF

MATERIAL SUMMARY

Project Line No	Bid Code	DESCRIPTION	Quantity	Unit
1365	06511	PAVE STRIPING-TEMP PAINT-6 IN	181,414.00	LF
1370	06542	PAVE STRIPING-THERMO-6 IN W	86,717.00	LF
1375	06543	PAVE STRIPING-THERMO-6 IN Y	56,470.00	LF
1380	06546	PAVE STRIPING-THERMO-12 IN W	3,864.00	LF
1385	06549	PAVE STRIPING-TEMP REM TAPE-B	113,008.00	LF
1390	06556	PAVE STRIPING-DUR TY 1-6 IN W	4,141.00	LF
1395	06557	PAVE STRIPING-DUR TY 1-6 IN Y	3,144.00	LF
1400	06560	PAVE STRIPING-DUR TY 1-12 IN W	4,172.00	LF
1405	06568	PAVE MARKING-THERMO STOP BAR-24IN	82.00	LF
1410	06574	PAVE MARKING-THERMO CURV ARROW	45.00	EACH
1415	06578	PAVE MARKING-THERMO MERGE ARROW	15.00	EACH
1420	06589	PAVEMENT MARKER TYPE V-MW	85.00	EACH
1425	06610	INLAID PAVEMENT MARKER-MW	95.00	EACH
1430	06611	INLAID PAVEMENT MARKER-MY	84.00	EACH
1435	06613	INLAID PAVEMENT MARKER-B W/R	1,116.00	EACH
1440	06614	INLAID PAVEMENT MARKER-B Y/R	1,415.00	EACH
1445	08301	REMOVE SUPERSTRUCTURE - KY727 EXISTING SUPERSTRUCTURE-WHITLEY	1.00	LS
1450	08902	CRASH CUSHION TY VI CLASS B TL3	13.00	EACH
1455	08909	CRASH CUSHION TY VI CLASS D TL3	2.00	EACH
1460	10020NS	FUEL ADJUSTMENT	664,658.00	DOLL
1465	10030NS	ASPHALT ADJUSTMENT	772,257.00	DOLL
1470	20191ED	OBJECT MARKER TY 3	26.00	EACH
1475	20467NS112	RELOCATE TUBULAR MARKER	48.00	EACH
1480	20550ND	SAWCUT PAVEMENT	48,743.00	LF
1485	22664EN	WATER BLASTING EXISTING STRIPE	2,170.00	LF
1490	23274EN11F	TURF REINFORCEMENT MAT 1	2,026.00	SQYD
1495	23275EN11F	TURF REINFORCEMENT MAT 2	1,330.00	SQYD
1500	23875NC	REMOVE THERMOPLASTIC ARROWS	8.00	EACH
1505	23929EC	LIGHTWEIGHT AGGREGATE FILL	4,931.00	CUYD
1510	24255EC	REMOVE CABLE GUARDRAIL BARRIER SYSTEM	21,634.00	LF
1515	24640ED	OBJECT MARKER TYPE 1	2.00	EACH
1520	24679ED	PAVE MARK THERMO CHEVRON	480.00	SQFT
1525	24779EC	INTELLIGENT COMPACTION FOR SOIL	410,000.00	CUYD
1530	24780EC	INTELLIGENT COMPACTION FOR AGGREGATE	149,572.00	TON
1535	24781EC	INTELLIGENT COMPACTION FOR ASPHALT	343,322.00	TON
1540	24891EC	PAVE MOUNT INFRARED TEMP EQUIPMENT	14,299,329.00	SF
1545	25075EC	QUEUE PROTECTION VEHICLE	1,600.00	HOUR
1550	25078ED	THRIE BEAM GUARDRAIL TRANSITION TL-3	12.00	EACH
1555	25079ED	THRIE BEAM GUARDRAIL TRANSITION TL-2	8.00	EACH
1560	25117EC	FURNISH QUEUE PROTECTION VEHICLES	48.00	MONT
1565	26136EC	PORTABLE QUEUE WARNING ALERT SYSTEM	24.00	MONT
1570	26137EC	QUEUE WARNING PCMS	144.00	MONT
1575	26138EC	QUEUE WARNING PORTABLE RADAR SENSORS	144.00	MONT
1580	26248EC	ELECTRONIC DELIVERY MGMT SYSTEM - AGG - WHITLEY	1.00	LS
1585	00440	ENTRANCE PIPE-15 IN	216.00	LF
1590	00461	CULVERT PIPE-15 IN	276.00	LF
1595	00462	CULVERT PIPE-18 IN	207.00	LF
1600	00464	CULVERT PIPE-24 IN	128.00	LF
1605	00521	STORM SEWER PIPE-15 IN	1,717.00	LF

MATERIAL SUMMARY

Project Line No	Bid Code	DESCRIPTION	Quantity	Unit
1610	00522	STORM SEWER PIPE-18 IN	1,012.00	LF
1615	00524	STORM SEWER PIPE-24 IN	18.00	LF
1620	01202	PIPE CULVERT HEADWALL-15 IN	4.00	EACH
1625	01204	PIPE CULVERT HEADWALL-18 IN	11.00	EACH
1630	01208	PIPE CULVERT HEADWALL-24 IN	6.00	EACH
1635	01310	REMOVE PIPE	1,069.00	LF
1640	01450	S & F BOX INLET-OUTLET-18 IN	2.00	EACH
1645	01480	CURB BOX INLET TYPE B	8.00	EACH
1650	01490	DROP BOX INLET TYPE 1	2.00	EACH
1655	01517	DROP BOX INLET TYPE 5F	2.00	EACH
1660	01624	CONC MED BARR BOX INLET TY B2 TL5 56	45.00	EACH
1665	01626	CONC MED BARR BOX INLET TY A2 TL5 56	3.00	EACH
1670	01641	JUNCTION BOX-15 IN	6.00	EACH
1675	01642	JUNCTION BOX-18 IN	3.00	EACH
1680	01643	JUNCTION BOX-24 IN	3.00	EACH
1685	01756	MANHOLE TYPE A	7.00	EACH
1690	01761	MANHOLE TYPE B	1.00	EACH
1695	24861EC	PVC FOLD AND FORM PIPE LINER-15 IN	3,834.00	LF
1700	24862EC	PVC FOLD AND FORM PIPE LINER-18 IN	4,419.00	LF
1705	24863EC	PVC FOLD AND FORM PIPE LINER-24 IN	2,805.00	LF
1710	24864EC	PVC FOLD AND FORM PIPE LINER-30 IN	711.00	LF
1715	24865EC	PVC FOLD AND FORM PIPE LINER-36 IN	299.00	LF
1720	26168EC	PVC FOLD AND FORM PIPE LINER-42 IN	319.00	LF
1725	01978	CONC MEDIAN BARRIER TYPE A TL5 56 IN	186.00	LF
1730	02231	STRUCTURE GRANULAR BACKFILL	260.00	CUYD
1735	02403	REMOVE CONCRETE MASONRY	84.50	CUYD
1740	02998	MASONRY COATING	972.00	SQYD
1745	03294	EXPAN JOINT REPLACE 1 1/2 IN	169.80	LF
1750	03299	ARMORED EDGE FOR CONCRETE	255.30	LF
1755	08003	FOUNDATION PREPARATION	1.00	LS
1760	08020	CRUSHED AGGREGATE SLOPE PROT	278.00	TON
1765	08033	TEST PILES	79.00	LF
1770	08046	PILES-STEEL HP12X53	769.00	LF
1775	08094	PILE POINTS-12 IN	24.00	EACH
1780	08100	CONCRETE-CLASS A	319.00	CUYD
1785	08104	CONCRETE-CLASS AA - (REVISED 7-23-25)	616.70	CUYD
1790	08140	MECHANICAL REINF COUPLER #5 EPOXY COATED - (REVISED 7-15-25)	801.00	EACH
1795	08151	STEEL REINFORCEMENT-EPOXY COATED - (REVISED 7-15-25)	185,135.00	LB
1800	08435	JACK & SUPPORT BRIDGE SPAN	1.00	LS
1805	08469	EXPANSION DAM-1.5 IN NEOPRENE	95.00	LF
1810	08510	REM EPOXY BIT FOREIGN OVERLAY	1,570.00	SQYD
1815	08526	CONC CLASS M FULL DEPTH PATCH	6.60	CUYD
1825	08671	PRECAST PC BOX BEAM SB33	901.70	LF
1830	20637ED	DRILLED SHAFT-ROCK 48 IN	52.00	LF
1835	20743ED	DRILLED SHAFT 54 IN-SOLID ROCK	70.00	LF
1840	20745ED	ROCK SOUNDINGS	113.00	LF
1845	20746ED	ROCK CORINGS	132.00	LF
1850	21321NC	CSL TESTING (4 TUBES)	6.00	EACH
1855	21969NN	BEARING REPLACEMENT	20.00	EACH

MATERIAL SUMMARY

Project Line No	Bid Code	DESCRIPTION	Quantity	Unit
1860	22417EN	DRILLED SHAFT-54 IN-COMMON	98.00	LF
1865	23032EN	BRIDGE BARRIER RETROFIT	372.00	LF
1870	23378EC	CONCRETE SEALING - (REVISED 7-23-25)	27,657.00	SQFT
1875	24094EC	PARTIAL DEPTH PATCHING	6.60	CUYD
1880	24179EC	MECHANICAL REINF COUPLER #4-EPOXY COATED - (REVISED 7-15-25)	18.00	EACH
1885	24982EC	CONCRETE COATING - WHITLEY	1.00	LS
1890	02231	STRUCTURE GRANULAR BACKFILL	1,295.00	CUYD
1895	02403	REMOVE CONCRETE MASONRY	116.80	CUYD
1900	02998	MASONRY COATING	1,165.00	SQYD
1905	03299	ARMORED EDGE FOR CONCRETE	330.00	LF
1910	08003	FOUNDATION PREPARATION	1.00	LS
1915	08020	CRUSHED AGGREGATE SLOPE PROT	2,687.00	TON
1920	08033	TEST PILES	133.00	LF
1925	08046	PILES-STEEL HP12X53	1,264.00	LF
1930	08094	PILE POINTS-12 IN	32.00	EACH
1935	08100	CONCRETE-CLASS A	609.60	CUYD
1940	08104	CONCRETE-CLASS AA - (REVISED 7-15-25)	1,028.20	CUYD
1945	08141	MECHANICAL REINF COUPLER #6 EPOXY COATED - (REVISED 7-15-25)	1,712.00	EACH
1950	08150	STEEL REINFORCEMENT	14,193.00	LB
1955	08151	STEEL REINFORCEMENT-EPOXY COATED	358,978.00	LB
1960	08672	PRECAST PC BOX BEAM SB42	2,964.40	LF
1965	20637ED	DRILLED SHAFT-ROCK 48 IN	64.00	LF
1970	20743ED	DRILLED SHAFT 54 IN-SOLID ROCK	10.00	LF
1975	20745ED	ROCK SOUNDINGS	138.00	LF
1980	20746ED	ROCK CORINGS	172.00	LF
1985	21321NC	CSL TESTING (4 TUBES)	8.00	EACH
1990	22417EN	DRILLED SHAFT-54 IN-COMMON	132.00	LF
1995	22880ED	BARRIER WALL TRANSITION	70.00	LF
2000	23378EC	CONCRETE SEALING	41,069.00	SQFT
2005	25028ED	RAIL SYSTEM SINGLE SLOPE - 40 IN	890.00	LF
2010	02231	STRUCTURE GRANULAR BACKFILL	93.00	CUYD
2015	03299	ARMORED EDGE FOR CONCRETE	52.30	LF
2020	08003	FOUNDATION PREPARATION	1.00	LS
2025	08020	CRUSHED AGGREGATE SLOPE PROT	769.00	TON
2030	08033	TEST PILES	59.00	LF
2035	08046	PILES-STEEL HP12X53	245.00	LF
2040	08094	PILE POINTS-12 IN	12.00	EACH
2045	08100	CONCRETE-CLASS A	166.20	CUYD
2050	08104	CONCRETE-CLASS AA	328.50	CUYD
2055	08151	STEEL REINFORCEMENT-EPOXY COATED	120,892.00	LB
2060	08671	PRECAST PC BOX BEAM SB33	1,154.00	LF
2065	20637ED	DRILLED SHAFT-ROCK 48 IN	48.00	LF
2070	20743ED	DRILLED SHAFT 54 IN-SOLID ROCK	9.00	LF
2075	20745ED	ROCK SOUNDINGS	142.00	LF
2080	20746ED	ROCK CORINGS	129.00	LF
2085	21321NC	CSL TESTING (4 TUBES)	6.00	EACH
2090	22417EN	DRILLED SHAFT-54 IN-COMMON	118.00	LF
2095	23378EC	CONCRETE SEALING	20,787.00	SQFT
2100	25028ED	RAIL SYSTEM SINGLE SLOPE - 40 IN	586.00	LF

MATERIAL SUMMARY

Project Line No	Bid Code	DESCRIPTION	Quantity	Unit
2105	02231	STRUCTURE GRANULAR BACKFILL	137.00	CUYD
2110	03299	ARMORED EDGE FOR CONCRETE	89.50	LF
2115	08002	STRUCTURE EXCAV-SOLID ROCK	88.00	CUYD
2120	08003	FOUNDATION PREPARATION	1.00	LS
2125	08020	CRUSHED AGGREGATE SLOPE PROT	505.00	TON
2130	08100	CONCRETE-CLASS A	316.00	CUYD
2135	08104	CONCRETE-CLASS AA	489.00	CUYD
2140	08134	MECHANICAL REINF COUPLER #9 - (REVISED 7-15-25)	14.00	EACH
2145	08140	MECHANICAL REINF COUPLER #5 EPOXY COATED - (REVISED 7-15-25)	30.00	EACH
2150	08150	STEEL REINFORCEMENT	6,387.00	LB
2155	08151	STEEL REINFORCEMENT-EPOXY COATED	199,125.00	LB
2160	08671	PRECAST PC BOX BEAM SB33	1,641.00	LF
2165	20637ED	DRILLED SHAFT-ROCK 48 IN	10.00	LF
2170	20745ED	ROCK SOUNDINGS	144.00	LF
2175	20746ED	ROCK CORINGS	285.00	LF
2180	21321NC	CSL TESTING (4 TUBES)	15.00	EACH
2185	23378EC	CONCRETE SEALING	27,464.00	SQFT
2190	23583EC	DRILLED SHAFT-48 IN-COMMON	115.00	LF
2195	23584EC	DRILLED SHAFT-42 IN-ROCK	105.00	LF
2200	25028ED	RAIL SYSTEM SINGLE SLOPE - 40 IN	555.00	LF
2205	02403	REMOVE CONCRETE MASONRY	80.00	CUYD
2210	02603	FABRIC-GEOTEXTILE CLASS 2	1,454.00	SQYD
2215	02604	FABRIC-GEOTEXTILE CLASS 1A	8,359.00	SQYD
2220	02998	MASONRY COATING	2,199.00	SQYD
2225	03299	ARMORED EDGE FOR CONCRETE	256.00	LF
2230	08001	STRUCTURE EXCAVATION-COMMON	2,525.00	CUYD
2235	08002	STRUCTURE EXCAV-SOLID ROCK	1,495.00	CUYD
2240	08003	FOUNDATION PREPARATION	1.00	LS
2245	08019	CYCLOPEAN STONE RIP RAP	419.00	TON
2250	08020	CRUSHED AGGREGATE SLOPE PROT	930.00	TON
2255	08033	TEST PILES	106.00	LF
2260	08051	PILES-STEEL HP14X89	1,391.00	LF
2265	08095	PILE POINTS-14 IN	34.00	EACH
2270	08100	CONCRETE-CLASS A	1,629.00	CUYD
2275	08104	CONCRETE-CLASS AA	1,229.00	CUYD
2280	08107	CONCRETE-CLASS M 2	30.00	CUYD
2285	08130	MECHANICAL REINF COUPLER #5	44.00	EACH
2290	08131	MECHANICAL REINF COUPLER #6	22.00	EACH
2295	08132	MECHANICAL REINF COUPLER #7	32.00	EACH
2300	08134	MECHANICAL REINF COUPLER #9	40.00	EACH
2305	08135	MECHANICAL REINF COUPLER #10	48.00	EACH
2310	08136	MECHANICAL REINF COUPLER #11	80.00	EACH
2315	08140	MECHANICAL REINF COUPLER #5 EPOXY COATED	1,389.00	EACH
2320	08141	MECHANICAL REINF COUPLER #6 EPOXY COATED	1,303.00	EACH
2325	08150	STEEL REINFORCEMENT	225,614.00	LB
2330	08151	STEEL REINFORCEMENT-EPOXY COATED	498,471.00	LB
2335	08160	STRUCTURAL STEEL - 1,591,494 LBS	1.00	LS
2340	08170	SHEAR CONNECTORS - 8,820	1.00	LS
2345	08500	APPROACH SLAB	185.00	SQYD

MATERIAL SUMMARY

Project Line No	Bid Code	DESCRIPTION	Quantity	Unit
2350	20214ED	CLEARING BRIDGE SITE	1.00	LS
2355	20745ED	ROCK SOUNDINGS	37.00	LF
2360	20746ED	ROCK CORINGS	196.80	LF
2365	22146EN	CONCRETE PATCHING REPAIR	80.00	SQFT
2370	23378EC	CONCRETE SEALING	34,572.00	SQFT
2375	23744EC	EPOXY INJECTION CRACK REPAIR	40.00	LF
2380	23859EC	FINGER EXPANSION JOINT	64.00	LF
2385	24405EC	MECHANICAL REINF COUPLER #8-EPOXY COATED	45.00	EACH
2390	24596EN	GRANULAR BACKFILL	2,190.00	CUYD
2395	24621EC	DRILLED SHAFT - 108 IN (COMMON)	29.00	LF
2400	24623EC	DRILLED SHAFT - 102 IN (SOLID ROCK)	94.80	LF
2405	25028ED	RAIL SYSTEM SINGLE SLOPE - 40 IN	1,195.00	LF
2410	02403	REMOVE CONCRETE MASONRY	80.00	CUYD
2415	02603	FABRIC-GEOTEXTILE CLASS 2	1,494.00	SQYD
2420	02604	FABRIC-GEOTEXTILE CLASS 1A	8,726.00	SQYD
2425	02998	MASONRY COATING	2,339.00	SQYD
2430	03299	ARMORED EDGE FOR CONCRETE	256.00	LF
2435	08001	STRUCTURE EXCAVATION-COMMON	2,581.00	CUYD
2440	08002	STRUCTURE EXCAV-SOLID ROCK	1,674.00	CUYD
2445	08003	FOUNDATION PREPARATION	1.00	LS
2450	08019	CYCLOPEAN STONE RIP RAP	965.00	TON
2455	08020	CRUSHED AGGREGATE SLOPE PROT	666.00	TON
2460	08033	TEST PILES	83.00	LF
2465	08051	PILES-STEEL HP14X89	967.00	LF
2470	08095	PILE POINTS-14 IN	34.00	EACH
2475	08100	CONCRETE-CLASS A	1,568.00	CUYD
2480	08104	CONCRETE-CLASS AA	1,392.00	CUYD
2485	08107	CONCRETE-CLASS M 2	30.00	CUYD
2490	08136	MECHANICAL REINF COUPLER #11	80.00	EACH
2495	08150	STEEL REINFORCEMENT	204,772.00	LB
2500	08151	STEEL REINFORCEMENT-EPOXY COATED	557,100.00	LB
2505	08160	STRUCTURAL STEEL - 2,124,938 LBS	1.00	LS
2510	08170	SHEAR CONNECTORS - 10,080	1.00	LS
2515	08500	APPROACH SLAB	185.00	SQYD
2520	20214ED	CLEARING BRIDGE SITE	1.00	LS
2525	20745ED	ROCK SOUNDINGS	64.00	LF
2530	20746ED	ROCK CORINGS	202.00	LF
2535	22146EN	CONCRETE PATCHING REPAIR	80.00	SQFT
2540	23378EC	CONCRETE SEALING	39,232.00	SQFT
2545	23744EC	EPOXY INJECTION CRACK REPAIR	40.00	LF
2550	23859EC	FINGER EXPANSION JOINT	64.00	LF
2555	24596EN	GRANULAR BACKFILL	2,390.00	CUYD
2560	24621EC	DRILLED SHAFT - 108 IN (COMMON)	56.00	LF
2565	24623EC	DRILLED SHAFT - 102 IN (SOLID ROCK)	100.00	LF
2570	25028ED	RAIL SYSTEM SINGLE SLOPE - 40 IN	1,336.00	LF
2575	02403	REMOVE CONCRETE MASONRY	17.00	CUYD
2580	08003	FOUNDATION PREPARATION	1.00	LS
2585	08100	CONCRETE-CLASS A	28.70	CUYD
2590	08150	STEEL REINFORCEMENT	2,480.00	LB
2595	04903	REFERENCE MARKER	32.00	EACH

MATERIAL SUMMARY

Project Line No	Bid Code	DESCRIPTION	Quantity	Unit
2600	06400	GMSS GALV STEEL TYPE A	9,383.00	LB
2605	06405	SBM ALUMINUM PANEL SIGNS	4,518.30	SQFT
2610	06406	SBM ALUM SHEET SIGNS .080 IN	52.00	SQFT
2615	06407	SBM ALUM SHEET SIGNS .125 IN	648.00	SQFT
2620	06410	STEEL POST TYPE 1	1,330.00	LF
2625	06412	STEEL POST MILE MARKERS	10.00	EACH
2630	06441	GMSS GALV STEEL TYPE C	7,183.00	LB
2635	06477	OSS GALV STEEL 70 FT TRUSS	2.00	EACH
2640	06480	OSS GALV STEEL 85 FT TRUSS	3.00	EACH
2645	06490	CLASS A CONCRETE FOR SIGNS	260.84	CUYD
2650	06491	STEEL REINFORCEMENT FOR SIGNS	21,736.00	LB
2655	20419ND	ROADWAY CROSS SECTION	27.00	EACH
2660	20912ND	BARRIER WALL POST	16.00	EACH
2665	21596ND	GMSS TYPE D	12.00	EACH
2670	24631EC	BARCODE SIGN INVENTORY	73.00	EACH
2675	02568	MOBILIZATION	1.00	LS
2680	02569	DEMOBILIZATION	1.00	LS
2685	23148EN	END ANCHORS - (ADDED 7-15-25)	1.00	EACH
2690	20411ED	LAW ENFORCEMENT OFFICER - (ADDED 7-15-25)	1,700.00	HOUR
2700	26233EC	MOBILIZATION FOR CONCRETE SURF TREATMENT - (REVISED 7-22-25)	1.00	LS
2705	26233EC	MOBILIZATION FOR CONCRETE SURF TREATMENT - (REVISED 7-22-25)	1.00	LS
2710	26233EC	MOBILIZATION FOR CONCRETE SURF TREATMENT - (REVISED 7-22-25)	1.00	LS
2715	26233EC	MOBILIZATION FOR CONCRETE SURF TREATMENT - (REVISED 7-22-25)	1.00	LS
2720	02603	FABRIC-GEOTEXTILE CLASS 2 - (ADDED 7-23-25)	17,460.00	SQYD
2725	08549	BLAST CLEANING - (ADDED 7-23-25)	1,570.00	SQYD
2730	08504	EPOXY SAND SLURRY - (ADDED 7-23-25)	49.00	SQYD

251016

PROPOSAL BID ITEMS

Report Date 7/23/25

251016

Section: 0001 - PAVING

LINE	BID CODE	ALT	DESCRIPTION	QUANTITY	UNIT	UNIT PRIC	FP	AMOUNT
0010	00001		DGA BASE	185,197.00	TON		$	
0020	00008		CEMENT STABILIZED ROADBED	174,500.00	SQYD		$	
0030	00018		DRAINAGE BLANKET-TYPE II-ASPH	128,683.00	TON		$	
0040	00100		ASPHALT SEAL AGGREGATE	828.00	TON		$	
0050	00103		ASPHALT SEAL COAT	100.10	TON		$	
0060	00190		LEVELING & WEDGING PG64-22	36,704.00	TON		$	
0070	00212		CL2 ASPH BASE 1.00D PG64-22	1,076.00	TON		$	
0080	00214		CL3 ASPH BASE 1.00D PG64-22	52,180.00	TON		$	
0090	00217		CL4 ASPH BASE 1.00D PG64-22	24,527.00	TON		$	
0100	00219		CL4 ASPH BASE 1.00D PG76-22	47,500.00	TON		$	
0110	00301		CL2 ASPH SURF 0.38D PG64-22	345.00	TON		$	
0120	00339		CL3 ASPH SURF 0.38D PG64-22	19,057.00	TON		$	
0130	00342		CL4 ASPH SURF 0.38A PG76-22	23,597.00	TON		$	
0140	00358		ASPHALT CURING SEAL	217.00	TON		$	
0150	02542		CEMENT	3,801.00	TON		$	
0160	02676		MOBILIZATION FOR MILL & TEXT	1.00	LS		$	
0170	02676		MOBILIZATION FOR MILL & TEXT WHITLEY	1.00	LS		$	
0180	02677		ASPHALT PAVE MILLING & TEXTURING	14,648.00	TON		$	
0190	02702		SAND FOR BLOTTER	677.00	TON		$	
0200	24904EC		CL3 ASPH BASE CK PG64-22	29,551.00	TON		$	
0210	24905EC		CL4 ASPH BASE CK PG64-22	32,608.00	TON		$	
0220	24970EC		ASPHALT MATERIAL FOR TACK NON-TRACKING	625.00	TON		$	

Section: 0002 - ROADWAY

LINE	BID CODE	ALT	DESCRIPTION	QUANTITY	UNIT	UNIT PRIC	FP	AMOUNT
0230	00078		CRUSHED AGGREGATE SIZE NO 2 (REV 7-23-25)	20,264.00	TON		$	
0240	01000		PERFORATED PIPE-4 IN	58,647.00	LF		$	
0250	01001		PERFORATED PIPE-6 IN	25,364.00	LF		$	
0260	01010		NON-PERFORATED PIPE-4 IN	2,004.00	LF		$	
0270	01011		NON-PERFORATED PIPE-6 IN	744.00	LF		$	
0280	01015		INSPECT & CERTIFY EDGE DRAIN SYSTEM LAUREL	1.00	LS		$	
0290	01015		INSPECT & CERTIFY EDGE DRAIN SYSTEM WHITLEY	1.00	LS		$	
0300	01020		PERF PIPE HEADWALL TY 1-4 IN	91.00	EACH		$	
0310	01028		PERF PIPE HEADWALL TY 3-4 IN	26.00	EACH		$	
0320	01032		PERF PIPE HEADWALL TY 4-4 IN	44.00	EACH		$	
0330	01033		PERF PIPE HEADWALL TY 4-6 IN	3.00	EACH		$	
0340	01740		CORED HOLE DRAINAGE BOX CON-4 IN	2.00	EACH		$	
0350	01741		CORED HOLE DRAINAGE BOX CON-6 IN	59.00	EACH		$	
0360	01978		CONC MEDIAN BARRIER TYPE A TL5 56 IN (REV 7-23-25)	24,879.00	LF		$	

251016

PROPOSAL BID ITEMS

Report Date 7/23/25

LINE	BID CODE	ALT	DESCRIPTION	QUANTITY	UNIT	UNIT PRIC	FP	AMOUNT
0370	01982		DELINEATOR FOR GUARDRAIL MONO DIRECTIONAL WHITE	482.00	EACH		$	
0380	01983		DELINEATOR FOR GUARDRAIL MONO DIRECTIONAL YELLOW	16.00	EACH		$	
0390	01984		DELINEATOR FOR BARRIER - WHITE	764.00	EACH		$	
0400	01985		DELINEATOR FOR BARRIER - YELLOW	855.00	EACH		$	
0410	01986		DELINEATOR FOR BARRIER WALL-B/Y	306.00	EACH		$	
0420	02002		REMOVE TEMP CONC BARRIER WALL	575.00	LF		$	
0430	02003		RELOCATE TEMP CONC BARRIER	44,690.00	LF		$	
0440	02014		BARRICADE-TYPE III	8.00	EACH		$	
0450	02159		TEMP DITCH	18,481.00	LF		$	
0460	02160		CLEAN TEMP DITCH	9,240.00	LF		$	
0470	02200		ROADWAY EXCAVATION	879,672.00	CUYD		$	
0480	02242		WATER	8,902.00	MGAL		$	
0490	02262		FENCE-WOVEN WIRE TYPE 1	1,921.00	LF		$	
0500	02265		REMOVE FENCE	1,830.00	LF		$	
0510	02268		REMOVE & REPLACE FENCE	58,417.00	LF		$	
0520	02351		GUARDRAIL-STEEL W BEAM-S FACE	37,525.00	LF		$	
0530	02360		GUARDRAIL TERMINAL SECTION NO 1	2.00	EACH		$	
0540	02367		GUARDRAIL END TREATMENT TYPE 1	31.00	EACH		$	
0550	02369		GUARDRAIL END TREATMENT TYPE 2A	31.00	EACH		$	
0560	02381		REMOVE GUARDRAIL	33,109.00	LF		$	
0570	02429		RIGHT-OF-WAY MONUMENT TYPE 1	15.00	EACH		$	
0580	02432		WITNESS POST	15.00	EACH		$	
0590	02484		CHANNEL LINING CLASS III	553.00	TON		$	
0600	02545		CLEARING AND GRUBBING 123.55 ACRES- WHITLEY	1.00	LS		$	
0610	02545		CLEARING AND GRUBBING 30.89 ACRES- LAUREL	1.00	LS		$	
0620	02555		CONCRETE-CLASS B	25.10	CUYD		$	
0630	02562		TEMPORARY SIGNS	1,012.40	SQFT		$	
0640	02585		EDGE KEY	593.00	LF		$	
0645	02603		FABRIC-GEOTEXTILE CLASS 2 (ADDED 7-23-25)	26,420.00	SQYD		$	
0650	02607		FABRIC-GEOTEXTILE CLASS 2 FOR PIPE	11,036.00	SQYD	$2.00	$	$22,072.00
0660	02650		MAINTAIN & CONTROL TRAFFIC LAUREL	1.00	LS		$	
0670	02650		MAINTAIN & CONTROL TRAFFIC WHITLEY	1.00	LS		$	
0680	02671		PORTABLE CHANGEABLE MESSAGE SIGN	10.00	EACH		$	
0690	02696		SHOULDER RUMBLE STRIPS	133,151.00	LF		$	
0700	02701		TEMP SILT FENCE	18,481.00	LF		$	
0710	02703		SILT TRAP TYPE A	154.00	EACH		$	
0720	02704		SILT TRAP TYPE B	154.00	EACH		$	
0730	02705		SILT TRAP TYPE C	154.00	EACH		$	
0740	02706		CLEAN SILT TRAP TYPE A	154.00	EACH		$	
0750	02707		CLEAN SILT TRAP TYPE B	154.00	EACH		$	
0760	02708		CLEAN SILT TRAP TYPE C	154.00	EACH		$	
0770	02726		STAKING LAUREL	1.00	LS		$	
0780	02726		STAKING WHITLEY	1.00	LS		$	

251016

PROPOSAL BID ITEMS

Report Date 7/23/25

LINE	BID CODE	ALT	DESCRIPTION	QUANTITY	UNIT	UNIT PRIC	FP	AMOUNT
0790	02731		REMOVE STRUCTURE I-75 N.B. LYNN CAMP CREEK EXISTING STRUCTURE-WHITLEY	1.00	LS		$	
0800	02731		REMOVE STRUCTURE I-75 S.B. LYNN CAMP CREEK EXISTING STRUCTURE-WHITLEY	1.00	LS		$	
0810	02731		REMOVE STRUCTURE KY 1259 EXISTING STRUCTURE- WHITLEY	1.00	LS		$	
0820	02731		REMOVE STRUCTURE KY 312 EXISTING STRUCTURE-WHITLEY	1.00	LS		$	
0830	02731		REMOVE STRUCTURE US 25E EXISTING STRUCTURE- LAUREL	1.00	LS		$	
0840	02775		ARROW PANEL	8.00	EACH		$	
0850	02898		RELOCATE CRASH CUSHION	7.00	EACH		$	
0860	03171		CONC BARRIER WALL TYPE 9T	70,055.00	LF		$	
0870	03225		TUBULAR MARKERS	96.00	EACH		$	
0880	05950		EROSION CONTROL BLANKET	1,183.00	SQYD		$	
0890	05952		TEMP MULCH	500,818.00	SQYD		$	
0900	05953		TEMP SEEDING AND PROTECTION	373,745.00	SQYD		$	
0910	05963		INITIAL FERTILIZER	23.00	TON		$	
0920	05964		MAINTENANCE FERTILIZER	38.70	TON		$	
0930	05985		SEEDING AND PROTECTION	747,490.00	SQYD		$	
0940	05992		AGRICULTURAL LIMESTONE	463.30	TON		$	
0950	06511		PAVE STRIPING-TEMP PAINT-6 IN	454,600.00	LF		$	
0960	06542		PAVE STRIPING-THERMO-6 IN W	109,551.00	LF		$	
0970	06543		PAVE STRIPING-THERMO-6 IN Y	70,939.00	LF		$	
0980	06546		PAVE STRIPING-THERMO-12 IN W	5,648.00	LF		$	
0990	06549		PAVE STRIPING-TEMP REM TAPE-B	137,815.00	LF		$	
1000	06556		PAVE STRIPING-DUR TY 1-6 IN W	4,750.00	LF		$	
1010	06557		PAVE STRIPING-DUR TY 1-6 IN Y	3,550.00	LF		$	
1020	06560		PAVE STRIPING-DUR TY 1-12 IN W	4,172.00	LF		$	
1030	06568		PAVE MARKING-THERMO STOP BAR-24IN	190.00	LF		$	
1040	06569		PAVE MARKING-THERMO CROSS-HATCH	319.00	SQFT		$	
1050	06574		PAVE MARKING-THERMO CURV ARROW	78.00	EACH		$	
1060	06578		PAVE MARKING-THERMO MERGE ARROW	21.00	EACH		$	
1070	06589		PAVEMENT MARKER TYPE V-MW	104.00	EACH		$	
1080	06610		INLAID PAVEMENT MARKER-MW	147.00	EACH		$	
1090	06611		INLAID PAVEMENT MARKER-MY	110.00	EACH		$	
1100	06613		INLAID PAVEMENT MARKER-B W/R	1,403.00	EACH		$	
1110	06614		INLAID PAVEMENT MARKER-B Y/R	1,720.00	EACH		$	
1120	08301		REMOVE SUPERSTRUCTURE KY727 EXISTING SUPERSTRUCTURE-WHITLEY	1.00	LS		$	
1130	08902		CRASH CUSHION TY VI CLASS B TL3	16.00	EACH		$	
1140	08909		CRASH CUSHION TY VI CLASS D TL3	3.00	EACH		$	
1150	10020NS		FUEL ADJUSTMENT	834,888.00	DOLL	$1.00	$	$834,888.00
1160	10030NS		ASPHALT ADJUSTMENT	1,044,430.00	DOLL	$1.00	$	$1,044,430.00
1170	20191ED		OBJECT MARKER TY 3	31.00	EACH		$	
1175	20411ED		LAW ENFORCEMENT OFFICER (ADDED 7-15-25)	2,500.00	HOUR		$	
1180	20467NS112		RELOCATE TUBULAR MARKER	48.00	EACH		$	
1190	20550ND		SAWCUT PAVEMENT	59,443.00	LF		$	

PROPOSAL BID ITEMS

Report Date 7/23/25

LINE	BID CODE	ALT	DESCRIPTION	QUANTITY	UNIT	UNIT PRIC	FP	AMOUNT
1200	22664EN		WATER BLASTING EXISTING STRIPE	3,341.00	LF		$	
1205	23148EN		END ANCHORS (ADDED 7-15-25)	1.00	EACH		$	
1210	23274EN11F		TURF REINFORCEMENT MAT 1	3,689.00	SQYD		$	
1220	23275EN11F		TURF REINFORCEMENT MAT 2	1,330.00	SQYD		$	
1230	23875NC		REMOVE THERMOPLASTIC ARROWS	14.00	EACH		$	
1240	23929EC		LIGHTWEIGHT AGGREGATE FILL	6,187.00	CUYD		$	
1250	24255EC		REMOVE CABLE GUARDRAIL BARRIER SYSTEM	24,661.00	LF		$	
1260	24640ED		OBJECT MARKER TYPE 1	3.00	EACH		$	
1270	24679ED		PAVE MARK THERMO CHEVRON	833.00	SQFT		$	
1280	24779EC		INTELLIGENT COMPACTION FOR SOIL	500,000.00	CUYD		$	
1290	24780EC		INTELLIGENT COMPACTION FOR AGGREGATE	184,919.00	TON		$	
1300	24781EC		INTELLIGENT COMPACTION FOR ASPHALT	420,315.00	TON		$	
1310	24891EC		PAVE MOUNT INFRARED TEMP EQUIPMENT	17,521,974.00	SF		$	
1320	25075EC		QUEUE PROTECTION VEHICLE	2,000.00	HOUR		$	
1330	25078ED		THRIE BEAM GUARDRAIL TRANSITION TL-3	18.00	EACH		$	
1340	25079ED		THRIE BEAM GUARDRAIL TRANSITION TL-2	10.00	EACH		$	
1350	25117EC		FURNISH QUEUE PROTECTION VEHICLES	60.00	MONT		$	
1360	26136EC		PORTABLE QUEUE WARNING ALERT SYSTEM	30.00	MONT		$	
1370	26137EC		QUEUE WARNING PCMS	180.00	MONT		$	
1380	26138EC		QUEUE WARNING PORTABLE RADAR SENSORS	180.00	MONT		$	
1390	26248EC		ELECTRONIC DELIVERY MGMT SYSTEM - AGG LAUREL	1.00	LS		$	
1400	26248EC		ELECTRONIC DELIVERY MGMT SYSTEM - AGG WHITLEY	1.00	LS		$	

Section: 0003 - DRAINAGE

LINE	BID CODE	ALT	DESCRIPTION	QUANTITY	UNIT	UNIT PRIC	FP	AMOUNT
1410	00440		ENTRANCE PIPE-15 IN	216.00	LF		$	
1420	00461		CULVERT PIPE-15 IN	375.00	LF		$	
1430	00462		CULVERT PIPE-18 IN	278.00	LF		$	
1440	00464		CULVERT PIPE-24 IN	169.00	LF		$	
1450	00469		CULVERT PIPE-42 IN	11.00	LF		$	
1460	00521		STORM SEWER PIPE-15 IN	2,069.00	LF		$	
1470	00522		STORM SEWER PIPE-18 IN	1,073.00	LF		$	
1480	00524		STORM SEWER PIPE-24 IN	18.00	LF		$	
1490	01202		PIPE CULVERT HEADWALL-15 IN	5.00	EACH		$	
1500	01202		PIPE CULVERT HEADWALL-15 IN	4.00	EACH		$	
1510	01204		PIPE CULVERT HEADWALL-18 IN	3.00	EACH		$	
1520	01204		PIPE CULVERT HEADWALL-18 IN	11.00	EACH		$	
1530	01208		PIPE CULVERT HEADWALL-24 IN	2.00	EACH		$	
1540	01208		PIPE CULVERT HEADWALL-24 IN	6.00	EACH		$	
1550	01214		PIPE CULVERT HEADWALL-42 IN	1.00	EACH		$	
1560	01310		REMOVE PIPE	1,728.00	LF		$	

PROPOSAL BID ITEMS

Report Date 7/23/25

LINE	BID CODE	ALT	DESCRIPTION	QUANTITY	UNIT	UNIT PRIC	FP	AMOUNT
1570	01450		S & F BOX INLET-OUTLET-18 IN	2.00	EACH		$	
1580	01480		CURB BOX INLET TYPE B	14.00	EACH		$	
1590	01490		DROP BOX INLET TYPE 1	2.00	EACH		$	
1600	01505		DROP BOX INLET TYPE 5B	1.00	EACH		$	
1610	01517		DROP BOX INLET TYPE 5F	2.00	EACH		$	
1620	01624		CONC MED BARR BOX INLET TY B2 TL5 56	53.00	EACH		$	
1630	01626		CONC MED BARR BOX INLET TY A2 TL5 56	3.00	EACH		$	
1640	01641		JUNCTION BOX-15 IN	8.00	EACH		$	
1650	01642		JUNCTION BOX-18 IN	4.00	EACH		$	
1660	01643		JUNCTION BOX-24 IN	3.00	EACH		$	
1670	01756		MANHOLE TYPE A	7.00	EACH		$	
1680	01761		MANHOLE TYPE B	1.00	EACH		$	
1690	24861EC		PVC FOLD AND FORM PIPE LINER-15 IN	4,776.00	LF		$	
1700	24862EC		PVC FOLD AND FORM PIPE LINER-18 IN	4,603.00	LF		$	
1710	24863EC		PVC FOLD AND FORM PIPE LINER-24 IN	3,370.00	LF		$	
1720	24864EC		PVC FOLD AND FORM PIPE LINER-30 IN	1,020.00	LF		$	
1730	24865EC		PVC FOLD AND FORM PIPE LINER-36 IN	299.00	LF		$	
1740	26168EC		PVC FOLD AND FORM PIPE LINER-42 IN	494.00	LF		$	

Section: 0004 - BRIDGE- I-75 OVER US 25E

LINE	BID CODE	ALT	DESCRIPTION	QUANTITY	UNIT	UNIT PRIC	FP	AMOUNT
1750	01978		CONC MEDIAN BARRIER TYPE A TL5 56 IN	204.00	LF		$	
1760	02231		STRUCTURE GRANULAR BACKFILL	366.00	CUYD		$	
1770	03299		ARMORED EDGE FOR CONCRETE	251.20	LF		$	
1780	08003		FOUNDATION PREPARATION	1.00	LS		$	
1790	08020		CRUSHED AGGREGATE SLOPE PROT	648.00	TON		$	
1800	08033		TEST PILES	55.00	LF		$	
1810	08046		PILES-STEEL HP12X53	840.00	LF		$	
1820	08094		PILE POINTS-12 IN	40.00	EACH		$	
1830	08100		CONCRETE-CLASS A	813.60	CUYD		$	
1840	08104		CONCRETE-CLASS AA	845.20	CUYD		$	
1850	08140		MECHANICAL REINF COUPLER #5 EPOXY COATED (REVISED 7-15-25)	1,686.00	EACH		$	
1860	08151		STEEL REINFORCEMENT-EPOXY COATED	424,236.00	LB		$	
1870	08669		PRECAST PC BOX BEAM SB21	3,176.00	LF		$	
1880	20637ED		DRILLED SHAFT-ROCK 48 IN	243.00	LF		$	
1890	20743ED		DRILLED SHAFT 54 IN-SOLID ROCK	168.00	LF		$	
1900	20745ED		ROCK SOUNDINGS	264.80	LF		$	
1910	20746ED		ROCK CORINGS	609.00	LF		$	
1920	21321NC		CSL TESTING (4 TUBES)	27.00	EACH		$	
1930	22417EN		DRILLED SHAFT-54 IN-COMMON	120.00	LF		$	
1940	23378EC		CONCRETE SEALING	50,662.00	SQFT		$	
1950	24405EC		MECHANICAL REINF COUPLER #8-EPOXY COATED (REVISED 7-15-25)	34.00	EACH		$	
1960	25028ED		RAIL SYSTEM SINGLE SLOPE - 40 IN	407.00	LF		$	

PROPOSAL BID ITEMS

Report Date 7/23/25

LINE	BID CODE	ALT	DESCRIPTION	QUANTITY	UNIT	UNIT PRIC	FP	AMOUNT
1976	26233EC		MOBILIZATION FOR CONCRETE SURF TREATMENT (REVISED 7-23-25)	1.00	LS		$	

Section: 0005 - BRIDGE- I-75 OVER US 25W

LINE	BID CODE	ALT	DESCRIPTION	QUANTITY	UNIT	UNIT PRIC	FP	AMOUNT
1970	01978		CONC MEDIAN BARRIER TYPE A TL5 56 IN	186.00	LF		$	
1980	02231		STRUCTURE GRANULAR BACKFILL	260.00	CUYD		$	
1990	02403		REMOVE CONCRETE MASONRY	84.50	CUYD		$	
2000	02998		MASONRY COATING	972.00	SQYD		$	
2010	03294		EXPAN JOINT REPLACE 1 1/2 IN	169.80	LF		$	
2020	03299		ARMORED EDGE FOR CONCRETE	255.30	LF		$	
2030	08003		FOUNDATION PREPARATION	1.00	LS		$	
2040	08020		CRUSHED AGGREGATE SLOPE PROT	278.00	TON		$	
2050	08033		TEST PILES	79.00	LF		$	
2060	08046		PILES-STEEL HP12X53	769.00	LF		$	
2070	08094		PILE POINTS-12 IN	24.00	EACH		$	
2080	08100		CONCRETE-CLASS A	319.00	CUYD		$	
2090	08104		CONCRETE-CLASS AA (REVISED 7-23-25)	616.70	CUYD		$	
2100	08140		MECHANICAL REINF COUPLER #5 EPOXY COATED (REVISED 7-15-25)	801.00	EACH		$	
2110	08151		STEEL REINFORCEMENT-EPOXY COATED (REVISED 7-15-25)	185,135.00	LB		$	
2120	08435		JACK & SUPPORT BRIDGE SPAN	1.00	LS		$	
2125	08549		BLAST CLEANING (ADDED 7-23-25)	1,570.00	SQYD		$	
2130	08469		EXPANSION DAM-1.5 IN NEOPRENE	95.00	LF		$	
2135	08504		EPOXY SAND SLURRY (ADDED 7-23-25)	49.00	SQYD		$	
2140	08510		REM EPOXY BIT FOREIGN OVERLAY	1,570.00	SQYD		$	
2150	08526		CONC CLASS M FULL DEPTH PATCH	6.60	CUYD		$	
2170	08671		PRECAST PC BOX BEAM SB33	901.70	LF		$	
2180	20637ED		DRILLED SHAFT-ROCK 48 IN	52.00	LF		$	
2190	20743ED		DRILLED SHAFT 54 IN-SOLID ROCK	70.00	LF		$	
2200	20745ED		ROCK SOUNDINGS	113.00	LF		$	
2210	20746ED		ROCK CORINGS	132.00	LF		$	
2220	21321NC		CSL TESTING (4 TUBES)	6.00	EACH		$	
2230	21969NN		BEARING REPLACEMENT	20.00	EACH		$	
2240	22417EN		DRILLED SHAFT-54 IN-COMMON	98.00	LF		$	
2250	23032EN		BRIDGE BARRIER RETROFIT	372.00	LF		$	
2260	23378EC		CONCRETE SEALING (REVISED 7-23-25)	27,657.00	SQFT		$	
2270	24094EC		PARTIAL DEPTH PATCHING	6.60	CUYD		$	
2280	24179EC		MECHANICAL REINF COUPLER #4-EPOXY COATED (REVISED 7-15-25)	18.00	EACH		$	
2290	24982EC		CONCRETE COATING WHITLEY	1.00	LS		$	

PROPOSAL BID ITEMS

Report Date 7/23/25

LINE	BID CODE	ALT	DESCRIPTION	QUANTITY	UNIT	UNIT PRIC	FP	AMOUNT
2295	26233EC		MOBILIZATION FOR CONCRETE SURF TREATMENT (REVISED 7-22-25)	1.00	LS		$	

Section: 0006 - BRIDGE- 5'X4' BOX CULVERT EXTENSION

LINE	BID CODE	ALT	DESCRIPTION	QUANTITY	UNIT	UNIT PRIC	FP	AMOUNT
2300	02403		REMOVE CONCRETE MASONRY	12.50	CUYD		$	
2310	08002		STRUCTURE EXCAV-SOLID ROCK	13.00	CUYD		$	
2320	08003		FOUNDATION PREPARATION	1.00	LS		$	
2330	08100		CONCRETE-CLASS A	31.00	CUYD		$	
2340	08150		STEEL REINFORCEMENT	3,307.00	LB		$	

Section: 0007 - BRIDGE- I-75 OVER KY 727

LINE	BID CODE	ALT	DESCRIPTION	QUANTITY	UNIT	UNIT PRIC	FP	AMOUNT
2350	02231		STRUCTURE GRANULAR BACKFILL	1,295.00	CUYD		$	
2360	02403		REMOVE CONCRETE MASONRY	116.80	CUYD		$	
2370	02998		MASONRY COATING	1,165.00	SQYD		$	
2380	03299		ARMORED EDGE FOR CONCRETE	330.00	LF		$	
2390	08003		FOUNDATION PREPARATION	1.00	LS		$	
2400	08020		CRUSHED AGGREGATE SLOPE PROT	2,687.00	TON		$	
2410	08033		TEST PILES	133.00	LF		$	
2420	08046		PILES-STEEL HP12X53	1,264.00	LF		$	
2430	08094		PILE POINTS-12 IN	32.00	EACH		$	
2440	08100		CONCRETE-CLASS A	609.60	CUYD		$	
2450	08104		CONCRETE-CLASS AA (REVISED 7-15-25)	1,028.20	CUYD		$	
2460	08141		MECHANICAL REINF COUPLER #6 EPOXY COATED (REVISED 7-15-25)	1,712.00	EACH		$	
2470	08150		STEEL REINFORCEMENT	14,193.00	LB		$	
2480	08151		STEEL REINFORCEMENT-EPOXY COATED	358,978.00	LB		$	
2490	08672		PRECAST PC BOX BEAM SB42	2,964.40	LF		$	
2500	20637ED		DRILLED SHAFT-ROCK 48 IN	64.00	LF		$	
2510	20743ED		DRILLED SHAFT 54 IN-SOLID ROCK	10.00	LF		$	
2520	20745ED		ROCK SOUNDINGS	138.00	LF		$	
2530	20746ED		ROCK CORINGS	172.00	LF		$	
2540	21321NC		CSL TESTING (4 TUBES)	8.00	EACH		$	
2550	22417EN		DRILLED SHAFT-54 IN-COMMON	132.00	LF		$	
2560	22880ED		BARRIER WALL TRANSITION	70.00	LF		$	
2570	23378EC		CONCRETE SEALING	41,069.00	SQFT		$	
2580	25028ED		RAIL SYSTEM SINGLE SLOPE - 40 IN	890.00	LF		$	
2585	26233EC		MOBILIZATION FOR CONCRETE SURF TREATMENT (REVISED 7-22-25)	1.00	LS		$	

Section: 0008 - BRIDGE- KY 1259 OVER I-75

Section: 0008 - BRIDGE- KY 1259 OVER I-75

LINE	BID CODE	ALT	DESCRIPTION	QUANTITY	UNIT	UNIT PRIC	FP	AMOUNT
2590	02231		STRUCTURE GRANULAR BACKFILL	93.00	CUYD		$	
2600	03299		ARMORED EDGE FOR CONCRETE	52.30	LF		$	
2610	08003		FOUNDATION PREPARATION	1.00	LS		$	
2620	08020		CRUSHED AGGREGATE SLOPE PROT	769.00	TON		$	
2630	08033		TEST PILES	59.00	LF		$	
2640	08046		PILES-STEEL HP12X53	245.00	LF		$	
2650	08094		PILE POINTS-12 IN	12.00	EACH		$	
2660	08100		CONCRETE-CLASS A	166.20	CUYD		$	
2670	08104		CONCRETE-CLASS AA	328.50	CUYD		$	
2680	08151		STEEL REINFORCEMENT-EPOXY COATED	120,892.00	LB		$	
2690	08671		PRECAST PC BOX BEAM SB33	1,154.00	LF		$	
2700	20637ED		DRILLED SHAFT-ROCK 48 IN	48.00	LF		$	
2710	20743ED		DRILLED SHAFT 54 IN-SOLID ROCK	9.00	LF		$	
2720	20745ED		ROCK SOUNDINGS	142.00	LF		$	
2730	20746ED		ROCK CORINGS	129.00	LF		$	
2740	21321NC		CSL TESTING (4 TUBES)	6.00	EACH		$	
2750	22417EN		DRILLED SHAFT-54 IN-COMMON	118.00	LF		$	
2760	23378EC		CONCRETE SEALING	20,787.00	SQFT		$	
2770	25028ED		RAIL SYSTEM SINGLE SLOPE - 40 IN	586.00	LF		$	
2775	26233EC		MOBILIZATION FOR CONCRETE SURF TREATMENT (REVISED 7-22-25)	1.00	LS		$	

Section: 0009 - BRIDGE- KY 312 OVER I-75

LINE	BID CODE	ALT	DESCRIPTION	QUANTITY	UNIT	UNIT PRIC	FP	AMOUNT
2780	02231		STRUCTURE GRANULAR BACKFILL	137.00	CUYD		$	
2790	03299		ARMORED EDGE FOR CONCRETE	89.50	LF		$	
2800	08002		STRUCTURE EXCAV-SOLID ROCK	88.00	CUYD		$	
2810	08003		FOUNDATION PREPARATION	1.00	LS		$	
2820	08020		CRUSHED AGGREGATE SLOPE PROT	505.00	TON		$	
2830	08100		CONCRETE-CLASS A	316.00	CUYD		$	
2840	08104		CONCRETE-CLASS AA	489.00	CUYD		$	
2850	08134		MECHANICAL REINF COUPLER #9 (REVISED 7-15-25)	14.00	EACH		$	
2860	08140		MECHANICAL REINF COUPLER #5 EPOXY COATED (REVISED 7-15-25)	30.00	EACH		$	
2870	08150		STEEL REINFORCEMENT	6,387.00	LB		$	
2880	08151		STEEL REINFORCEMENT-EPOXY COATED	199,125.00	LB		$	
2890	08671		PRECAST PC BOX BEAM SB33	1,641.00	LF		$	
2900	20637ED		DRILLED SHAFT-ROCK 48 IN	10.00	LF		$	
2910	20745ED		ROCK SOUNDINGS	144.00	LF		$	
2920	20746ED		ROCK CORINGS	285.00	LF		$	
2930	21321NC		CSL TESTING (4 TUBES)	15.00	EACH		$	
2940	23378EC		CONCRETE SEALING	27,464.00	SQFT		$	
2950	23583EC		DRILLED SHAFT-48 IN-COMMON	115.00	LF		$	
2960	23584EC		DRILLED SHAFT-42 IN-ROCK	105.00	LF		$	
2970	25028ED		RAIL SYSTEM SINGLE SLOPE - 40 IN	555.00	LF		$	

PROPOSAL BID ITEMS

Report Date 7/23/25

LINE	BID CODE	ALT	DESCRIPTION	QUANTITY	UNIT	UNIT PRIC	FP	AMOUNT
2975	26233EC		MOBILIZATION FOR CONCRETE SURF TREATMENT (REVISED 7-22-25)	1.00	LS		$	

Section: 0010 - BRIDGE- NB I-75 OVER LYNN CAMP CREEK

LINE	BID CODE	ALT	DESCRIPTION	QUANTITY	UNIT	UNIT PRIC	FP	AMOUNT
2980	02403		REMOVE CONCRETE MASONRY	80.00	CUYD		$	
2990	02603		FABRIC-GEOTEXTILE CLASS 2	1,454.00	SQYD		$	
3000	02604		FABRIC-GEOTEXTILE CLASS 1A	8,359.00	SQYD		$	
3010	02998		MASONRY COATING	2,199.00	SQYD		$	
3020	03299		ARMORED EDGE FOR CONCRETE	256.00	LF		$	
3030	08001		STRUCTURE EXCAVATION-COMMON	2,525.00	CUYD		$	
3040	08002		STRUCTURE EXCAV-SOLID ROCK	1,495.00	CUYD		$	
3050	08003		FOUNDATION PREPARATION	1.00	LS		$	
3060	08019		CYCLOPEAN STONE RIP RAP	419.00	TON		$	
3070	08020		CRUSHED AGGREGATE SLOPE PROT	930.00	TON		$	
3080	08033		TEST PILES	106.00	LF		$	
3090	08051		PILES-STEEL HP14X89	1,391.00	LF		$	
3100	08095		PILE POINTS-14 IN	34.00	EACH		$	
3110	08100		CONCRETE-CLASS A	1,629.00	CUYD		$	
3120	08104		CONCRETE-CLASS AA	1,229.00	CUYD		$	
3130	08107		CONCRETE-CLASS M 2	30.00	CUYD		$	
3140	08130		MECHANICAL REINF COUPLER #5	44.00	EACH		$	
3150	08131		MECHANICAL REINF COUPLER #6	22.00	EACH		$	
3160	08132		MECHANICAL REINF COUPLER #7	32.00	EACH		$	
3170	08134		MECHANICAL REINF COUPLER #9	40.00	EACH		$	
3180	08135		MECHANICAL REINF COUPLER #10	48.00	EACH		$	
3190	08136		MECHANICAL REINF COUPLER #11	80.00	EACH		$	
3200	08140		MECHANICAL REINF COUPLER #5 EPOXY COATED	1,389.00	EACH		$	
3210	08141		MECHANICAL REINF COUPLER #6 EPOXY COATED	1,303.00	EACH		$	
3220	08150		STEEL REINFORCEMENT	225,614.00	LB		$	
3230	08151		STEEL REINFORCEMENT-EPOXY COATED	498,471.00	LB		$	
3240	08160		STRUCTURAL STEEL 1,591,494 LBS	1.00	LS		$	
3250	08170		SHEAR CONNECTORS 8,820	1.00	LS		$	
3260	08500		APPROACH SLAB	185.00	SQYD		$	
3270	20214ED		CLEARING BRIDGE SITE	1.00	LS		$	
3280	20745ED		ROCK SOUNDINGS	37.00	LF		$	
3290	20746ED		ROCK CORINGS	196.80	LF		$	
3300	22146EN		CONCRETE PATCHING REPAIR	80.00	SQFT		$	
3310	23378EC		CONCRETE SEALING	34,572.00	SQFT		$	
3320	23744EC		EPOXY INJECTION CRACK REPAIR	40.00	LF		$	
3330	23859EC		FINGER EXPANSION JOINT	64.00	LF		$	
3340	24405EC		MECHANICAL REINF COUPLER #8-EPOXY COATED	45.00	EACH		$	
3350	24596EN		GRANULAR BACKFILL	2,190.00	CUYD		$	

PROPOSAL BID ITEMS

Report Date 7/23/25

LINE	BID CODE	ALT	DESCRIPTION	QUANTITY	UNIT	UNIT PRIC	FP	AMOUNT
3360	24621EC		DRILLED SHAFT - 108 IN (COMMON)	29.00	LF		$	
3370	24623EC		DRILLED SHAFT - 102 IN (SOLID ROCK)	94.80	LF		$	
3380	25028ED		RAIL SYSTEM SINGLE SLOPE - 40 IN	1,195.00	LF		$	

Section: 0011 - BRIDGE- SB I-75 OVER LYNN CAMP CREEK

LINE	BID CODE	ALT	DESCRIPTION	QUANTITY	UNIT	UNIT PRIC	FP	AMOUNT
3390	02403		REMOVE CONCRETE MASONRY	80.00	CUYD		$	
3400	02603		FABRIC-GEOTEXTILE CLASS 2	1,494.00	SQYD		$	
3410	02604		FABRIC-GEOTEXTILE CLASS 1A	8,726.00	SQYD		$	
3420	02998		MASONRY COATING	2,339.00	SQYD		$	
3430	03299		ARMORED EDGE FOR CONCRETE	256.00	LF		$	
3440	08001		STRUCTURE EXCAVATION-COMMON	2,581.00	CUYD		$	
3450	08002		STRUCTURE EXCAV-SOLID ROCK	1,674.00	CUYD		$	
3460	08003		FOUNDATION PREPARATION	1.00	LS		$	
3470	08019		CYCLOPEAN STONE RIP RAP	965.00	TON		$	
3480	08020		CRUSHED AGGREGATE SLOPE PROT	666.00	TON		$	
3490	08033		TEST PILES	83.00	LF		$	
3500	08051		PILES-STEEL HP14X89	967.00	LF		$	
3510	08095		PILE POINTS-14 IN	34.00	EACH		$	
3520	08100		CONCRETE-CLASS A	1,568.00	CUYD		$	
3530	08104		CONCRETE-CLASS AA	1,392.00	CUYD		$	
3540	08107		CONCRETE-CLASS M 2	30.00	CUYD		$	
3550	08136		MECHANICAL REINF COUPLER #11	80.00	EACH		$	
3560	08150		STEEL REINFORCEMENT	204,772.00	LB		$	
3570	08151		STEEL REINFORCEMENT-EPOXY COATED	557,100.00	LB		$	
3580	08160		STRUCTURAL STEEL 2,124,938 LBS	1.00	LS		$	
3590	08170		SHEAR CONNECTORS 10,080	1.00	LS		$	
3600	08500		APPROACH SLAB	185.00	SQYD		$	
3610	20214ED		CLEARING BRIDGE SITE	1.00	LS		$	
3620	20745ED		ROCK SOUNDINGS	64.00	LF		$	
3630	20746ED		ROCK CORINGS	202.00	LF		$	
3640	22146EN		CONCRETE PATCHING REPAIR	80.00	SQFT		$	
3650	23378EC		CONCRETE SEALING	39,232.00	SQFT		$	
3660	23744EC		EPOXY INJECTION CRACK REPAIR	40.00	LF		$	
3670	23859EC		FINGER EXPANSION JOINT	64.00	LF		$	
3680	24596EN		GRANULAR BACKFILL	2,390.00	CUYD		$	
3690	24621EC		DRILLED SHAFT - 108 IN (COMMON)	56.00	LF		$	
3700	24623EC		DRILLED SHAFT - 102 IN (SOLID ROCK)	100.00	LF		$	
3710	25028ED		RAIL SYSTEM SINGLE SLOPE - 40 IN	1,336.00	LF		$	

Section: 0012 - BRIDGE- 4'X4' BOX CULVERT EXTENSION

LINE	BID CODE	ALT	DESCRIPTION	QUANTITY	UNIT	UNIT PRIC	FP	AMOUNT
3720	02403		REMOVE CONCRETE MASONRY	17.00	CUYD		$	
3730	08003		FOUNDATION PREPARATION	1.00	LS		$	

PROPOSAL BID ITEMS

Report Date 7/23/25

LINE	BID CODE	ALT	DESCRIPTION	QUANTITY	UNIT	UNIT PRIC	FP	AMOUNT
3740	08100		CONCRETE-CLASS A	28.70	CUYD		$	
3750	08150		STEEL REINFORCEMENT	2,480.00	LB		$	

Section: 0013 - SIGNING

LINE	BID CODE	ALT	DESCRIPTION	QUANTITY	UNIT	UNIT PRIC	FP	AMOUNT
3760	04903		REFERENCE MARKER	40.00	EACH		$	
3770	06400		GMSS GALV STEEL TYPE A	14,939.00	LB		$	
3780	06405		SBM ALUMINUM PANEL SIGNS	6,466.90	SQFT		$	
3790	06406		SBM ALUM SHEET SIGNS .080 IN	75.00	SQFT		$	
3800	06407		SBM ALUM SHEET SIGNS .125 IN	879.00	SQFT		$	
3810	06410		STEEL POST TYPE 1	1,850.00	LF		$	
3820	06412		STEEL POST MILE MARKERS	12.00	EACH		$	
3830	06441		GMSS GALV STEEL TYPE C	10,294.00	LB		$	
3840	06477		OSS GALV STEEL 70 FT TRUSS	2.00	EACH		$	
3850	06478		OSS GALV STEEL 75 FT TRUSS	1.00	EACH		$	
3860	06480		OSS GALV STEEL 85 FT TRUSS	4.00	EACH		$	
3870	06490		CLASS A CONCRETE FOR SIGNS	367.97	CUYD		$	
3880	06491		STEEL REINFORCEMENT FOR SIGNS	30,173.00	LB		$	
3890	20419ND		ROADWAY CROSS SECTION	37.00	EACH		$	
3900	20912ND		BARRIER WALL POST	20.00	EACH		$	
3910	21596ND		GMSS TYPE D	18.00	EACH		$	
3920	24631EC		BARCODE SIGN INVENTORY	100.00	EACH		$	

Section: 0014 - DEMOBILIZATION &/OR MOBILIZATION

LINE	BID CODE	ALT	DESCRIPTION	QUANTITY	UNIT	UNIT PRIC	FP	AMOUNT
3930	02568		MOBILIZATION	1.00	LS		$	
3940	02569		DEMOBILIZATION	1.00	LS		$	

GENERAL SUMMARY

ITEM	DESCRIPTION	UNIT	I-75	EXIT 25 RAMPS	EXIT 29 RAMPS	KY 1259	KY 312	US 25E	M.O.T.						WHITLEY COUNTY TOTAL	LAUREL COUNTY TOTAL	PROJECT TOTAL
78	CRUSHED AGGREGATE SIZE NO. 2 (7)	TON	164						20,100						13,430	6,834	20,264
1015	INSPECT & CERTIFY EDGE DRAIN SYSTEM	LS	1														1
1978	CONC MEDIAN BARRIER TYPE A TL5 56IN	LF	24,879												21,650	3,229	24,879
1982	DELINEATOR FOR GUARDRAIL MONODIRECTIONAL WHITE	EACH	421	24	20	8	9								386	96	482
1983	DELINEATOR FOR GUARDRAIL MONODIRECTIONAL YELLOW	EACH	12	4											14	2	16
1984	DELINEATOR FOR BARRIER - WHITE	EACH							764						626	138	764
1985	DELINEATOR FOR BARRIER - YELLOW	EACH							855						701	154	855
1986	DELINEATOR FOR BARRIER WALL-B/Y	EACH	306												251	55	306
2002	REMOVE TEMP CONC BARRIER WALL (4)	LF	575													575	575
2003	RELOCATE TEMP CONC BARRIER	LF							44,690						36,646	8,044	44,690
2014	BARRICADE TYPE III	EACH							8						4	4	8
2159	TEMP DITCH	LF	18,481												15,654	2,827	18,481
2160	CLEAN TEMP DITCH	LF	9,240												7,826	1,414	9,240
2200	ROADWAY EXCAVATION	CU YD	867,081	7,552	2,940	207	1,892								745,001	134,671	879,672
2242	WATER (2)	MGAL	6,990	1,015	398	118	258	123							7,123	1,779	8,902
2262	FENCE - WOVEN WIRE TYPE 1	LF	1,921												1,921		1,921
2265	REMOVE FENCE	LF	1,830												1,830		1,830
2268	REMOVE & REPLACE FENCE	LF	51,079	5,295	2,043										48,750	9,667	58,417
2351	GUARDRAIL-STEEL W BEAM-S FACE	LF	32,887.5	1,700	1,500	650	787.5								30,250	7,275	37,525
2360	GUARDRAIL TERMINAL SECTION NO. 1	EACH					2								2		2
2367	GUARDRAIL END TREATMENT TYPE 1	EACH	24	3	1	2	1								25	6	31
2369	GUARDRAIL END TREATMENT TYPE 2A	EACH	22	4	1	2	2								25	6	31
2381	REMOVE GUARDRAIL	LF	30,901	772		765	671								27,547	5,562	33,109
2429	RIGHT-OF-WAY MONUMENT TYPE 1	EACH	15												15		15
2432	WITNESS POST	EACH	15												15		15
2484	CHANNEL LINING CLASS III	TON	553												553		553
2545	CLEARING & GRUBBING (1)(3)	LS	1														1
2555	CONCRETE-CLASS B (5)	CU YD	21.2	2.1	0.8		1.0								20.5	4.6	25.1
2562	TEMPORARY SIGNS	SQ FT							1,012.4						764.4	248	1,012.4
2568	MOBILIZATION	LS	1														1
2569	DEMOBILIZATION	LS	1														1
2585	EDGE KEY	LF	120	120	60	49	91	153							308	285	593
2607	FABRIC GEOTEXTILE TY IV FOR PIPE (8)	SQ YD	10,581	63	83	117	192								9,236	1,800	11,036
2650	MAINTAIN & CONTROL TRAFFIC	LS	1														1
2671	PORTABLE CHANGEABLE MESSAGE SIGN (6)	EACH							10						6	4	10
2696	SHOULDER RUMBLE STRIPS	LF	119,048	10,155	3,948										107,964	25,187	133,151
2701	TEMP SILT FENCE	LF	18,481												15,654	2,827	18,481
2703	SILT TRAP TYPE A	EACH	154												121	33	154
2704	SILT TRAP TYPE B	EACH	154												121	33	154
2705	SILT TRAP TYPE C	EACH	154												121	33	154
2706	CLEAN SILT TRAP TYPE A	EACH	154												121	33	154
2707	CLEAN SILT TRAP TYPE B	EACH	154												121	33	154
2708	CLEAN SILT TRAP TYPE C	EACH	154												121	33	154
2726	STAKING	LS	1														1
2731	REMOVE STRUCTURE - EXISTING KY 1259 BRIDGE	LS				1									1		1
2731	REMOVE STRUCTURE - EXISTING KY 312 BRIDGE	LS					1								1		1
2731	REMOVE STRUCTURE - EXISTING N.B. I-75 LYNN CAMP CREEK BRIDGE	LS	1												1		1
2731	REMOVE STRUCTURE - EXISTING S.B. I-75 LYNN CAMP CREEK BRIDGE	LS	1												1		1
2731	REMOVE STRUCTURE - EXISTING US 25E BRIDGE	LS	1													1	1
2775	ARROW PANEL	EACH							8						4	4	8
2898	RELOCATE CRASH CUSHION	EACH							7						4	3	7
3171	CONCRETE BARRIER WALL TYPE 9T	LF	300						69,755						57,500	12,555	70,055
3225	TUBULAR MARKERS	EACH							96						96		96
2603	FABRIC GEOTEXTILE TY 1	SQ YD							26,420						17,460	8,960	26,420

NOTES:

(1) APPROXIMATELY 154.44 ACRES

(2) FOR CONTROLLING DUST CAUSED BY MAINTAINING TRAFFIC ONLY (1000 MGAL/MILE)

(3) CLEARING AND GRUBBING INCLUDES ALL AREAS WITHIN THE DISTURB LIMITS AND 10' BEYOND THE DISTURB AREAS AND OTHER AREAS WITHIN THE PROJECT RIGHT-OF-WAY, UNLESS DIRECTED BY THE ENGINEER.

(4) PLAN QUANITY OF TEMPORARY CONCRETE BARRIER WALL REMOVED SHALL REMAIN THE PROPERTY OF THE DEPARTMENT OF HIGHWAYS AND WILL BE REMOVED AND STORED AT THE LOADOMETER STATION ADJACENT TO THE PROJECT STATION AS DIRECTED BY THE ENGINEER.

(5) CONCRETE-CLASS B FOR RIGHT OF WAY FENCE INTERMEDIATE AND PULL POSTS.

(6) PORTABLE CHANGEABLE MESSAGE SIGNS SHALL REMAIN THE PROPERTY OF THE CONTRACTOR.

(7) CARRIED FORWARD FROM PERFORATED PIPE SUMMARY SHEET.

(8) CARRIED FORWARD FROM PIPE DRAINAGE SUMMARY SHEET.

WHITLEY COUNTY EARTHWORK TOTALS

EMBANKMENT		59,712 CU. YDS.
EMB. BENCH	+	35,603 CU. YDS.
TOTAL EMBANKMENT		95,315 CU. YDS.
COMMON		709,398 CU. YDS.
EMB. BENCH	+	35,603 CU. YDS.
TOTAL EXCAVATION		745,001 CU. YDS.

LAUREL COUNTY EARTHWORK TOTALS

EMBANKMENT		25,695 CU. YDS.
EMB. BENCH	+	17,464 CU. YDS.
TOTAL EMBANKMENT		43,159 CU. YDS.
COMMON		117,207 CU. YDS.
EMB. BENCH	+	17,464 CU. YDS.
TOTAL EXCAVATION		134,671 CU. YDS.

PROJECT EARTHWORK TOTALS

EMBANKMENT		85,407 CU. YDS.
EMB. BENCH	+	53,067 CU. YDS.
TOTAL EMBANKMENT		138,474 CU. YDS.
COMMON		826,605 CU. YDS.
EMB. BENCH	+	53,067 CU. YDS.
TOTAL EXCAVATION		879,672 CU. YDS.

**SHRINK AND SWELL FACTORS ARE THE RESPONSIBILITY OF THE CONTRACTOR.

WIDENING FOR GUARDRAIL AND END TREATMENTS ARE SHOWN ON THE CROSS-SECTIONS AND IS THEREFORE INCLUDED IN 'ROADWAY EXCAVATION'.

GENERAL SUMMARY

REVISED: JULY 22, 2025

ITEM	DESCRIPTION	UNIT	I-75	EXIT 25 RAMPS	EXIT 29 RAMPS	KY 1259	KY 312	US 25E	M.O.T.						WHITLEY COUNTY TOTAL	LAUREL COUNTY TOTAL	PROJECT TOTAL
78	CRUSHED AGGREGATE SIZE NO. 2 (7)	TON	164						20,100						13,430	6,834	20,264
1015	INSPECT & CERTIFY EDGE DRAIN SYSTEM	LS	1														1
1978	CONC MEDIAN BARRIER TYPE A TL5 56IN	LF	24,879												21,650	3,229	24,879
1982	DELINEATOR FOR GUARDRAIL MONODIRECTIONAL WHITE	EACH	421	24	20	8	9								386	96	482
1983	DELINEATOR FOR GUARDRAIL MONODIRECTIONAL YELLOW	EACH	12	4											14	2	16
1984	DELINEATOR FOR BARRIER - WHITE	EACH							764						626	138	764
1985	DELINEATOR FOR BARRIER - YELLOW	EACH							855						701	154	855
1986	DELINEATOR FOR BARRIER WALL-B/Y	EACH	306												251	55	306
2002	REMOVE TEMP CONC BARRIER WALL (4)	LF	575													575	575
2003	RELOCATE TEMP CONC BARRIER	LF							44,690						36,646	8,044	44,690
2014	BARRICADE TYPE III	EACH							8						4	4	8
2159	TEMP DITCH	LF	18,481												15,654	2,827	18,481
2160	CLEAN TEMP DITCH	LF	9,240												7,826	1,414	9,240
2200	ROADWAY EXCAVATION	CU YD	867,081	7,552	2,940	207	1,892								745,001	134,671	879,672
2242	WATER (2)	MGAL	6,990	1,015	398	118	258	123							7,123	1,779	8,902
2262	FENCE - WOVEN WIRE TYPE 1	LF	1,921												1,921		1,921
2265	REMOVE FENCE	LF	1,830												1,830		1,830
2268	REMOVE & REPLACE FENCE	LF	51,079	5,295	2,043										48,750	9,667	58,417
2351	GUARDRAIL-STEEL W BEAM-S FACE	LF	32,887.5	1,700	1,500	650	787.5								30,250	7,275	37,525
2360	GUARDRAIL TERMINAL SECTION NO. 1	EACH					2								2		2
2367	GUARDRAIL END TREATMENT TYPE 1	EACH	24	3	1	2	1								25	6	31
2369	GUARDRAIL END TREATMENT TYPE 2A	EACH	22	4	1	2	2								25	6	31
2381	REMOVE GUARDRAIL	LF	30,901	772		765	671								27,547	5,562	33,109
2429	RIGHT-OF-WAY MONUMENT TYPE 1	EACH	15												15		15
2432	WITNESS POST	EACH	15												15		15
2484	CHANNEL LINING CLASS III	TON	553												553		553
2545	CLEARING & GRUBBING (1)(3)	LS	1														1
2555	CONCRETE-CLASS B (5)	CU YD	21.2	2.1	0.8		1.0								20.5	4.6	25.1
2562	TEMPORARY SIGNS	SQ FT							1,012.4						764.4	248	1,012.4
2568	MOBILIZATION	LS	1														1
2569	DEMOBILIZATION	LS	1														1
2585	EDGE KEY	LF	120	120	60	49	91	153							308	285	593
2607	FABRIC GEOTEXTILE TY IV FOR PIPE (8)	SQ YD	10,581	63	83	117	192								9,236	1,800	11,036
2650	MAINTAIN & CONTROL TRAFFIC	LS	1														1
2671	PORTABLE CHANGEABLE MESSAGE SIGN (6)	EACH							10						6	4	10
2696	SHOULDER RUMBLE STRIPS	LF	119,048	10,155	3,948										107,964	25,187	133,151
2701	TEMP SILT FENCE	LF	18,481												15,654	2,827	18,481
2703	SILT TRAP TYPE A	EACH	154												121	33	154
2704	SILT TRAP TYPE B	EACH	154												121	33	154
2705	SILT TRAP TYPE C	EACH	154												121	33	154
2706	CLEAN SILT TRAP TYPE A	EACH	154												121	33	154
2707	CLEAN SILT TRAP TYPE B	EACH	154												121	33	154
2708	CLEAN SILT TRAP TYPE C	EACH	154												121	33	154
2726	STAKING	LS	1														1
2731	REMOVE STRUCTURE - EXISTING KY 1259 BRIDGE	LS				1									1		1
2731	REMOVE STRUCTURE - EXISTING KY 312 BRIDGE	LS					1								1		1
2731	REMOVE STRUCTURE - EXISTING N.B. I-75 LYNN CAMP CREEK BRIDGE	LS	1												1		1
2731	REMOVE STRUCTURE - EXISTING S.B. I-75 LYNN CAMP CREEK BRIDGE	LS	1												1		1
2731	REMOVE STRUCTURE - EXISTING US 25E BRIDGE	LS	1													1	1
2775	ARROW PANEL	EACH							8						4	4	8
2898	RELOCATE CRASH CUSHION	EACH							7						4	3	7
3171	CONCRETE BARRIER WALL TYPE 9T	LF	300						69,755						57,500	12,555	70,055
3225	TUBULAR MARKERS	EACH							96						96		96
2603	FABRIC GEOTEXTILE TY I	SQ YD							26,420						17,460	8,960	26,420

NOTES:

(1) APPROXIMATELY 154.44 ACRES

(2) FOR CONTROLLING DUST CAUSED BY MAINTAINING TRAFFIC ONLY (1000 MGAL/MILE)

(3) CLEARING AND GRUBBING INCLUDES ALL AREAS WITHIN THE DISTURB LIMITS AND 10' BEYOND THE DISTURB AREAS AND OTHER AREAS WITHIN THE PROJECT RIGHT-OF-WAY, UNLESS DIRECTED BY THE ENGINEER.

(4) PLAN QUANITY OF TEMPORARY CONCRETE BARRIER WALL REMOVED SHALL REMAIN THE PROPERTY OF THE DEPARTMENT OF HIGHWAYS AND WILL BE REMOVED AND STORED AT THE LOADOMETER STATION ADJACENT TO THE PROJECT STATION AS DIRECTED BY THE ENGINEER.

(5) CONCRETE-CLASS B FOR RIGHT OF WAY FENCE INTERMEDIATE AND PULL POSTS.

(6) PORTABLE CHANGEABLE MESSAGE SIGNS SHALL REMAIN THE PROPERTY OF THE CONTRACTOR.

(7) CARRIED FORWARD FROM PERFORATED PIPE SUMMARY SHEET.

(8) CARRIED FORWARD FROM PIPE DRAINAGE SUMMARY SHEET.

WHITLEY COUNTY EARTHWORK TOTALS

EMBANKMENT		59,712 CU. YDS.
EMB. BENCH	+	35,603 CU. YDS.
TOTAL EMBANKMENT		95,315 CU. YDS.
COMMON		709,398 CU. YDS.
EMB. BENCH	+	35,603 CU. YDS.
TOTAL EXCAVATION		745,001 CU. YDS.

LAUREL COUNTY EARTHWORK TOTALS

EMBANKMENT		25,695 CU. YDS.
EMB. BENCH	+	17,464 CU. YDS.
TOTAL EMBANKMENT		43,159 CU. YDS.
COMMON		117,207 CU. YDS.
EMB. BENCH	+	17,464 CU. YDS.
TOTAL EXCAVATION		134,671 CU. YDS.

PROJECT EARTHWORK TOTALS

EMBANKMENT		85,407 CU. YDS.
EMB. BENCH	+	53,067 CU. YDS.
TOTAL EMBANKMENT		138,474 CU. YDS.
COMMON		826,605 CU. YDS.
EMB. BENCH	+	53,067 CU. YDS.
TOTAL EXCAVATION		879,672 CU. YDS.

**SHRINK AND SWELL FACTORS ARE THE RESPONSIBILITY OF THE CONTRACTOR.

WIDENING FOR GUARDRAIL AND END TREATMENTS ARE SHOWN ON THE CROSS-SECTIONS AND IS THEREFORE INCLUDED IN 'ROADWAY EXCAVATION'.

TRANSPORTATION CABINET
DEPARTMENT OF HIGHWAYS

WHITLEY COUNTY
I-75
OVER US 25W
STA. 1336+99.94

ESTIMATE OF QUANTITIES

BID ITEM CODE	08100	08104	08549	08151	24179EC	08140	08020	02231	20743ED	22417EN	20637ED	20746ED	20745ED	21321NC	08046	08033	08094	08003	02998	23378EC	24982EC	02403	08510	08671	23032EN	01978	03299	03294	08469	24094EC	08526	21969NN	08435	26233EC
BID ITEM	Concrete Class "A"	Concrete Class "AA"	Blast Cleaning	Steel Reinforcement, Epoxy Coated	Mechanical Reinf Coupler #4 Epoxy Coated	Mechanical Reinf Coupler #5 Epoxy Coated	Crushed Aggregate Slope Protection	Structure Granular Backfill	54 Inch Drilled Shaft, Solid Rock	54 Inch Drilled Shaft, Common	48 Inch Drilled Shaft, Solid Rock	Rock Coring	Rock Sounding	CSL Testing (4 Tubes)	Piles - Steel HP 12 x 53	Test Piles	Pile Points 12"	Foundation Preparation	Masonry Coating	Concrete Sealing	Concrete Coating ①	Remove Concrete Masonry	Remove Epoxy Bit Foreign Overlay	Precast PC Box Beam SB33	Bridge Barrier Retrofit	Conc Median Barrier Type A TL5 56 In	Armored Edge for Concrete	Expansion Joint Replace 1 1/2 IN	Expansion Dam - 1.5 IN Neoprene	Partial Depth Patching	Conc Class M Full Depth Patch	Bearing Replacement	Jack and Support Bridge Span	Mobilization For Concrete Surface Treatment
UNIT	C.Y.	C.Y.	S.Y.	LBS.	EACH	EACH	Tons	C.Y.	L.F.	L.F.	L.F.	L.F.	L.F.	EACH	L.F.	L.F.	EACH	LS	S.Y.	S.F.	LS	C.Y.	S.Y.	L.F.	L.F.	L.F.	L.F.	L.F.	L.F.	C.Y.	C.Y.	EACH	LS	LS
Substructure: End Bent #1	67.2			6784	9		139	130							494	49	12															10		
Substructure: Pier #1	92.3			18573					28	56	26	66	64	3					486			8.6												
Substructure: Pier #2	92.3			18930					42	42	26	66	49	3					486			8.6												
Substructure: End Bent #2	67.2			6913	9		139	130							275	30	12															10		
Superstructure		616.7	1570	133935		801														27657		67.3	1570	901.7	372	186	255.3	169.8	95.0	6.6	6.6			
BRIDGE TOTALS	319.0	616.7	1570	185135	18	801	278	260	70	98	52	132	113	6	769	79	24	1	972	27657	1	84.5	1570	901.7	372	186	255.3	169.8	95.0	6.6	6.6	20	1	1

① Estimated Surface Area of Concrete Coating = 448 S.Y.

ESTIMATE OF QUANTITIES

BID ITEM CODE	08504
BID ITEM	Epoxy Sand Slurry
UNIT	S.Y.
Substructure: End Bent #1	
Substructure: Pier #1	
Substructure: Pier #2	
Substructure: End Bent #2	
Superstructure	49
BRIDGE TOTALS	49

INDEX OF SHEETS

Sheet No.	Description
S1	Title Sheet
S2	General Notes
S3-S4	Layout
S5-S6	Construction Phasing
S7-S8	Subsurface Data
S9	Foundation Layout
S10	Drilled Shaft Details
S11-S14	End Bent #1
S15-S17	Pier #1
S18-S20	Pier #2
S21	Pier #1 Crashwall Extension
S22	Pier #2 Crashwall Extension
S23-S26	End Bent #2
S27	Bearing Replacement
S28	Framing Plan
S29	PPC Box Beam SB33x48
S30-S34	Superstructure
S35-S36A	Construction Elevations
S37	56" Median Barrier
S38	Sepia 043: Bearing Details
S39	Sepia 042: Sheet 013: Concrete Barrier Wall Type 9T
S40	Sepia 042: Sheet 014: Concrete Barrier Wall Type 9T

SPECIAL NOTES

Special Note for Drilled Shafts
Special Note for Non-Destructive Testing of Drilled Shafts
Special Note for Bearing Replacement
Special Note for Concrete Sealing
Special Note for Concrete Coating
Special Note for Bridge Deck Restoration and Waterproofing with Concrete Overlays

SPECIAL PROVISIONS

69 Embankment at Bridge End Bent Structures

STANDARD DRAWINGS

BJE-001-14	Armored Edges
BJE-002	Expansion Joints
BJE-003	Expansion Joint Replacement 1"-3"
BJE-005	Expansion Joint Replacement General Notes
BBP-001-12	Elastomeric Bearing Pads for Prestressed Beams
BGX-012-02	Geotechnical Legend
BGX-006-10	Stencils for Structures
BGX-015-04	Bridge Drains
BGX-022	Joint Waterproofing
BHS-010	Railing System 40 Inch Single Slope
BPS-003-09	HP12x53 Steel Pile
RGX-100-07	Treatment of Embankments at End Bents
RGX-105-09	Treatment of Embankments at End Bents - Details
BGX-009-04	Bridge Restoration and Waterproofing with Concrete Overlays

SPECIFICATIONS

2019 Standard Specifications for Road and Bridge Construction.

AASHTO LRFD Bridge Design Specifications, 9th Ed

PLANS PREPARED BY
HDR ENGINEERING, INC.

STATE OF KENTUCKY
MACY LUKAS PURCELL
36344
LICENSED
PROFESSIONAL ENGINEER

July 21, 2025
MACY LUKAS PURCELL, PE
KY NO. 36344

COMMONWEALTH OF KENTUCKY
DEPARTMENT OF HIGHWAYS
TEAM KENTUCKY TRANSPORTATION CABINET

REVISION	DATE

PREPARED BY HDR

DATE: March, 2025	CHECKED BY
DESIGNED BY: L. Decker	M. Purcell
DETAILED BY: L. Decker	M. Purcell

TITLE SHEET
CROSSING: US 25W

ROUTE	ITEM NO.	COUNTY OF
I-75	11-14.8	WHITLEY
	SHEET NO. S1	DRAWING NUMBER 25767

TRANSPORTATION CABINET
DEPARTMENT OF HIGHWAYS

WHITLEY COUNTY
I-75
OVER US 25W
STA. 1336+99.94

ESTIMATE OF QUANTITIES

BID ITEM CODE	08100	08104	08549	08151	24179EC	08140	08020	02231	20743ED	22417EN	20637ED	20746ED	20745ED	21321NC	08046	08033	08094	08003	02998	23378EC	24982EC	02403	08510	08671	23032EN	01978	03299	03294	08469	24094EC	08526	21969NN	08435	26233EC
BID ITEM	Concrete Class "A"	Concrete Class "AA"	Blast Cleaning	Steel Reinforcement, Epoxy Coated	Mechanical Reinf Coupler #4 Epoxy Coated	Mechanical Reinf Coupler #5 Epoxy Coated	Crushed Aggregate Slope Protection	Structure Granular Backfill	54 Inch Drilled Shaft, Solid Rock	54 Inch Drilled Shaft, Common	48 Inch Drilled Shaft, Solid Rock	Rock Coring	Rock Sounding	CSL Testing (4 Tubes)	Piles - Steel HP 12 x 53	Test Piles	Pile Points 12"	Foundation Preparation	Masonry Coating	Concrete Sealing	Concrete Coating ①	Remove Concrete Masonry	Remove Epoxy Bit Foreign Overlay	Precast PC Box Beam SB33	Bridge Barrier Retrofit	Conc Median Barrier Type A TL5 56 In	Armored Edge for Concrete	Expansion Joint Replace 1 1/2 IN	Expansion Dam - 1.5 IN Neoprene	Partial Depth Patching	Conc Class M Full Depth Patch	Bearing Replacement	Jack and Support Bridge Span	Mobilization For Concrete Surface Treatment
UNIT	C.Y.	C.Y.	S.Y.	LBS.	EACH	EACH	Tons	C.Y.	L.F.	L.F.	L.F.	L.F.	L.F.	EACH	L.F.	L.F.	EACH	LS	S.Y.	S.F.	LS	C.Y.	S.Y.	L.F.	L.F.	L.F.	L.F.	L.F.	L.F.	L.F.	C.Y.	C.Y.	EACH	LS	LS
Substructure: End Bent #1	67.2			6784	9		139	130							494	49	12																10		
Substructure: Pier #1	92.3			18573					28	56	26	66	64	3					486			8.6													
Substructure: Pier #2	92.3			18930					42	42	26	66	49	3					486			8.6													
Substructure: End Bent #2	67.2			6913	9		139	130							275	30	12																10		
Superstructure		616.7	1570	133935		801														27657		67.3	1570	901.7	372	186	255.3	169.8	95.0	6.6	6.6				
BRIDGE TOTALS	319.0	616.7	1570	185135	18	801	278	260	70	98	52	132	113	6	769	79	24	1	972	27657	1	84.5	1570	901.7	372	186	255.3	169.8	95.0	6.6	6.6	20	1	1

① Estimated Surface Area of Concrete Coating = 448 S.Y.

ESTIMATE OF QUANTITIES

BID ITEM CODE	08504
BID ITEM	Epoxy Sand Slurry
UNIT	S.Y.
Substructure: End Bent #1	
Substructure: Pier #1	
Substructure: Pier #2	
Substructure: End Bent #2	
Superstructure	49
BRIDGE TOTALS	49

INDEX OF SHEETS

Sheet No.	Description
S1	Title Sheet
S2	General Notes
S3-S4	Layout
S5-S6	Construction Phasing
S7-S8	Subsurface Data
S9	Foundation Layout
S10	Drilled Shaft Details
S11-S14	End Bent #1
S15-S17	Pier #1
S18-S20	Pier #2
S21	Pier #1 Crashwall Extension
S22	Pier #2 Crashwall Extension
S23-S26	End Bent #2
S27	Bearing Replacement
S28	Framing Plan
S29	PPC Box Beam SB33x48
S30-S34	Superstructure
S35-S36A	Construction Elevations
S37	56" Median Barrier
S38	Sepia 043: Bearing Details
S39	Sepia 042: Sheet 013: Concrete Barrier Wall Type 9T
S40	Sepia 042: Sheet 014: Concrete Barrier Wall Type 9T

SPECIAL NOTES

Special Note for Drilled Shafts
Special Note for Non-Destructive Testing of Drilled Shafts
Special Note for Bearing Replacement
Special Note for Concrete Sealing
Special Note for Concrete Coating
Special Note for Bridge Deck Restoration and Waterproofing with Concrete Overlays

SPECIAL PROVISIONS

69 Embankment at Bridge End Bent Structures

STANDARD DRAWINGS

BJE-001-14	Armored Edges
BJE-002	Expansion Joints
BJE-003	Expansion Joint Replacement 1"-3"
BJE-005	Expansion Joint Replacement General Notes
BBP-001-12	Elastomeric Bearing Pads for Prestressed Beams
BGX-012-02	Geotechnical Legend
BGX-006-10	Stencils for Structures
BGX-015-04	Bridge Drains
BGX-022	Joint Waterproofing
BHS-010	Railing System 40 Inch Single Slope
BPS-003-09	HP12x53 Steel Pile
RGX-100-07	Treatment of Embankments at End Bents
RGX-105-09	Treatment of Embankments at End Bents - Details
BGX-009-04	Bridge Restoration and Waterproofing with Concrete Overlays

SPECIFICATIONS

2019 Standard Specifications for Road and Bridge Construction.

AASHTO LRFD Bridge Design Specifications, 9th Ed

PLANS PREPARED BY
HDR ENGINEERING, INC.

STATE OF KENTUCKY
MACY LUKAS PURCELL
36344
LICENSED
PROFESSIONAL ENGINEER

July 21, 2025
MACY LUKAS PURCELL, PE
KY NO. 36344

COMMONWEALTH OF KENTUCKY
DEPARTMENT OF HIGHWAYS
TEAM KENTUCKY TRANSPORTATION CABINET

REVISION	DATE
UPDATED QUANTITIES, SHEETS, STD. DWG.	07/21/2025

PREPARED BY HDR

DATE: March, 2025	CHECKED BY
DESIGNED BY: L. Decker	M. Purcell
DETAILED BY: L. Decker	M. Purcell

TITLE SHEET
CROSSING: US 25W

ROUTE	ITEM NO.	COUNTY OF
I-75	11-14.8	WHITLEY
	SHEET NO. S1	DRAWING NUMBER 25767

SPECIFICATIONS: References to the Specifications, unless otherwise noted, are to the current edition of the Kentucky Transportation Cabinet, Department of Highways, Standard Specifications for Road and Bridge Construction--including any current Supplemental Specifications. All references to the AASHTO Specifications are to the Ninth Edition of the AASHTO LRFD Bridge Design Specifications (2020).

DESIGN LOADS: This bridge is designed for KY HL-93 live load. The KY HL-93 live load is arrived at by increasing the standard HL-93 truck and lane loads as specified in the AASHTO Specifications by 25%. The design also includes 16 PSF for stay-in-place form weight in order to allow the option for concrete filling the flutes/valleys. Contractor shall ensure form weight (including concrete in voids) does not exceed 16 PSF. Concrete in the valleys shall be considered incidental to the project. As an alternative, the Contractor may fill flutes with expanded or extruded polystyrene.

FUTURE WEARING SURFACE: This bridge is designed for a 15 PSF future wearing surface load with a 1.50 load factor at the Strength I limit state.

SEISMIC DESIGN: This bridge is designed for Seismic Performance Zone 1 based on a modified peak ground acceleration coefficient As = 0.200 and a modified response spectral acceleration coefficient SD1 = 0.150 assuming Site Class D.

MATERIAL DESIGN SPECIFICATIONS:

Class "A" Concrete:	f'c = 3,500 psi
Class "A" Modified Concrete:	f'c = 3,500 psi
Class "AA" Concrete:	f'c = 4,000 psi
Steel Reinforcement:	Fy = 60,000 psi
Steel Piling and Structural Steel:	Fy = 50,000 psi
Class "D" Modified Concrete:	See beam sheet

CONCRETE: Class "AA" Concrete shall be used in the deck, railing, median barrier, and pier diaphragms. Class "A" Concrete shall be used in the pier columns, pier caps, and in the end bents. Class "A" Modified Concrete shall be used in the drilled shafts. Class "D" Modified Concrete shall be used in the prestressed beams.

PREFORMED JOINT MATERIAL: All material shall be Type I sponge rubber and meet the requirements of AASHTO M153.

MECHANICAL REINFORCEMENT COUPLERS: Mechanical couplers are required where shown on the plans and at joints between construction phases. Mechanical couplers shall meet ASTM E466 or E606 requirements for fatigue, be in accordance with Section 602 of the Specifications, and provide a mechanical tension splice equivalent to 125 percent of the specified yield strength of the bar being spliced. Where couplers are required, the bar length shown in the bill of reinforcement is the length measured from the center of the construction joint and no adjustment has been made for any reduction or increase in bar length that may be required for the mechanical coupler device. Any additional bar length required for the mechanical splice is to be incidental to the unit price bid for mechanical reinforcement couplers. The estimate of quantities includes the number of test specimens required by 602.03.06 of the Specifications.

BONDED CONSTRUCTION JOINT: Where a bonded construction joint is called for in the plans, new concrete shall be bonded to previously placed (cured) concrete with a two-component epoxy resin system conforming to Sections 511 and 826 of the Specifications. The cost of this work is incidental to the unit bid price for the class concrete being placed.

CONSTRUCTION IDENTIFICATION: The names of the prime contractor and the sub-contractor shall be imprinted in the concrete in accordance with Standard Drawing BGX-006 (current edition) at a location designated by the Engineer. The contractor shall furnish all plans, equipment, and labor necessary to do the work for which no direct payment will be made.

ELASTOMERIC BEARINGS: Elastomeric bearings shall conform to the AASHTO LRFD Bridge Construction Specifications, Section 18 and the AASTHO LRFD Bridge Design Specifications, Section 14. Leveling pads at the integral end bents are unlaminated bearings cut or molded from Grade 3 elastomer with a hardness of 50 durometers. Leveling pads are not required to be load tested. The cost of all elastomeric bearings and shims are to be included in the unit price per linear feet of precast beams.

CONCRETE COATING, MASONRY COATING & CONCRETE SEALER: Apply concrete coating to all exposed concrete (new and old) of End Bent #1 and End Bent #2 in accordance with the Special Note for Concrete Coating.

Apply masonry coating to all exposed concrete (new and old) on Pier #1 and Pier #2. Areas of concrete to be covered by a bearing pad shall receive neither concrete coating or masonry coating. Both concrete coating and masonry coating shall have an identical color of light gray.

CONCRETE SEALING: Apply concrete sealer in accordance with the Special Note for Concrete Sealing. Note that concrete sealers may not be compatible with some concrete curing compounds. Contractor shall take appropriate measures to ensure the sealer penetrates the concrete as intended by the manufacturer.

EXPANSION JOINTS: EMSEAL, strip seal, or a similar type joint is required for this bridge. Neither V-seals or compression seal type joints shall be considered as an option.

BEVELED EDGES: Bevel all exposed edges 3/4", unless otherwise noted.

SHOP DRAWINGS: Submit shop drawings that are required by the plans and specifications directly to the Engineer of Record via email (macy.purcell@hdrinc.com). If any changes in the design plans are proposed by a fabricator or supplier, submit those changes to the Consultant through the Contractor. Submit final, approved plans to KYTC Division of Maintenance in Frankfort.

REINFORCEMENT: Dimensions shown from the face of concrete to bars are to center of bars unless otherwise shown. Spacing of bars is from center to center of bars. Clear distance to face of concrete is 2", unless otherwise noted. Any reinforcing bars designated by suffix (E) in the plans shall be epoxy coated in accordance with Section 811.10 of the Standard Specifications. Any reinforcing bars designated by suffix (S) in a bill of reinforcement shall be considered a stirrup for purposes of bend diameters.

SPIRAL REINFORCEMENT IN COLUMNS: Lap splices of spirals, where desired by the contractor shall be made with a minimum of one and a half turns of spiral. Do not weld any rebar unless it is ASTM A706 rebar. The length of spiral shown in the bill of reinforcement for each pier corresponds with a height measured from the top of shaft to the bottom layer of reinforcement in the pier cap. Additionally, one and one-half closed coils shall be provided at the top of each spiral unit in the column and terminate in the pier cap. Centralizing wheels, cage-stabilizing bars, and additional lap splices of spirals may be needed, but shall be considered incidental to the bid item for Steel Reinforcement or the drilled shaft. Spiral reinforcement shall meet the requirements of subsection 811.02(c) of the Specifications.

SAWCUTTING EXISTING CONCRETE: Portions of the existing superstructure and existing end bents shall be removed and disposed of as part of this project. Prior to the removal of the existing concrete masonry, cut the surface with a concrete saw to a depth of one inch to facilitate a neat line. Include all labor and equipment related to this work in the unit price bid for "REMOVE CONCRETE MASONRY."

STRUCTURE GRANULAR BACKFILL: End bents are to be backfilled with structure granular backfill in accordance with Special Provision 69 and Standard Drawings RGX-100 and RGX-105 (current editions). All labor and materials associated with geotextile fabric and excavation for installation of this material will be considered incidental to the unit price bid for "STRUCTURE GRANULAR BACKFILL".

ARMORED EDGE: Fabricate armored edge to match cross slope and parabolic crown at each end of bridge.

CONCRETE DECK: The deck shall be poured continuously from beginning of bridge to end of bridge before the concrete is allowed to set. This placement sequence may not be changed without the written approval of the designer. Stay-in-place metal forms are allowed. The depth of the deck shown on the plans shall be provided above the forms.

FOUNDATION PREPARATION: Any excavation or other miscellaneous foundation work not already stated as incidental to another bid item shall be included in the lump sum bid for "FOUNDATION PREPARATION".

TEMPORARY SHORING: Temporary shoring will be required at the existing abutments to accommodate phased construction of the new end bents. Temporary shoring, sheeting, and/or dewatering may also be required for the installation of the drilled shafts at the piers. Include the cost for these items in the lump sum bid for "FOUNDATION PREPARATION".

COMPLETION OF THE STRUCTURE: The contractor is required to complete the structure in accordance with the plans and specifications. Material, labor, or construction operations not otherwise specified are to be included in the bid item most appropriate to the work involved. This may include cofferdams, shoring, excavations, backfilling, removal of all or parts of existing structures, phase construction, incidental materials, labor, or anything else required to complete the structure.

DIMENSIONS: Dimensions are for a normal temperature of 60 degrees Fahrenheit. Layout dimensions are horizontal dimensions.

SLOPE PROTECTION: Slope protection shall be utilized at the end bents. The slope protection shall meet the requirements of Sections 703.03.01 D and 805 of the Standard Specifications for Road and Bridge Construction, current edition. A Geotextile Fabric in accordance with Section 843 of the Standard Specifications for Road and Bridge Construction, current edition, shall be placed between the embankment and the slope protection. Any required excavation and all geotextile fabric shall be incidental to the unit price bid for “CRUSHED AGGREGATE SLOPE PROTECTION.”

Embankments at the bridge end bent locations shall be constructed in accordance with Special Provision #69 for Embankment at Bridge End Bent Structures.

MASTIC TAPE: Apply Mastic Tape in accordance with BGX-022. Mastic Tape used to seal joints is to meet the requirements of ASTM C-877 Type I, II, or III. The joint is to be covered with 12-inch wide mastic tape. Prior to application, the joint surface shall be clean and free of dirt, debris, or deleterious material. Primer, if required by the tape manufacturer, shall be applied for a minimum width of nine inches on each side of the joint.
Mastic Tape shall be either:

EZ-WRAP RUBBER by PRESS-SEAL GASKET CORPORATION,
SEAL WRAP by MAR MAC MANUFACTURING CO. INC.,
CADILLOC by the UP RUBBER CO. INC.
or approved equal.

Mastic Tape shall cover the joint continuously unless otherwise shown in the plans. Mastic Tape shall be spliced by lapping a minimum of six inches and in accordance with the manufacturers recommendations with the overlap running downhill. All preformed expansion joint material, caulking, mastic tape, and equipment and labor necessary to complete the joints are incidental to the unit price bid for Class “A” Concrete.

PILE POINTS: Provide pile points as required on the FOUNDATION LAYOUT sheet. Pile points shall be in accordance with Section 604 of the specifications and of the type shown on the pile record sheet.

DRILLED SHAFTS: Drilled Shafts shall be constructed in accordance with the Special Note for Drilled Shafts and the Standard Specifications except that the maximum coarse aggregate size for Class "A" Modified Concrete to be used in drilled shafts is #78. Include all costs (labor, equipment, and materials including spiral and longitudinal reinforcement, reinforcement splices, mechanical couplers, concrete, and temporary or permanent casing) associated with the drilled shafts in the unit price bid for "DRILLED SHAFT - 54" COMMON" or "DRILLED SHAFT - 54" SOLID ROCK" as applicable.

DIMENSIONS & ELEVATIONS: The existing bridge drawing numbers is 16514. All dimensions and elevations given in these plans are based on field surveyed data and dimensions from the old plans. Prior to beginning work or ordering any materials, the contractor shall verify all dimensions and elevations. No claim will be honored by the Department of Highways regarding site conditions.

VERTICAL DATUM: All elevations referenced herein are based on the North American Vertical Datum of 1988 (NAVD). If required, the vertical datum conversion at the site from National Geodetic Vertical Datum of 1929 (NGVD) to NAVD is -0.509 feet.

ON-SITE INSPECTION: Each contractor submitting a bid for this work shall make a thorough inspection of the project site prior to submitting a bid and shall be thoroughly familiarized with existing conditions so that work can be expeditiously performed after a contract is awarded. Submission of a bid will be considered evidence of this inspection having been made. Any claims resulting from site conditions will not be honored by the Department of Highways.

TEMPORARY BRIDGE FLOORING: Provide flooring for workers in situations where the danger from a fall is compounded by the traffic and for protection to the traffic. If temporary flooring is necessary in addition to deck forms, the flooring is to be designed using the sum of dead load and live vertical loads. Include 50 PSF on horizontal surfaces and the weight of any material or equipment that is placed or allowed to fall during construction or demolition in the live load computation. Submit flooring design along with the falsework design to KYTC for approval. Temporary flooring shall be installed as soon as practicable after beams are set. Extend temporary flooring across traffic lanes, ramps, and usable shoulders of highways. Consider all phases of furnishing and removing the floorings as incidental to the Contract. This item may be considered in addition to any requirement set forth in subsection 107.01.01 of the Specifications.

No separate measurement or payment will be made for providing and subsequently removing temporary bridge flooring as this is considered incidental to the Contract. The requirement for temporary bridge flooring is waived when stay-in-place deck forms are used.

DAMAGE TO STRUCTURE: The contractor shall bear all responsibility and expense for any and all damage to the structure during repair work, even to the removal and replacement of the entire structure, should it be damaged by the contractors actions or inaction.

COMMON EXCAVATION: Include all labor and materials for common excavation in the lump sum bid price for "FOUNDATION PREPARATION."

DOWELING REINFORCING STEEL INTO EXISTING CONCRETE: Where shown on the Plans, drill and use an epoxy adhesive for bonding new reinforcement into existing concrete using a two component epoxy resin system conforming to Section 826 of the Specifications. Embedment of the reinforcing steel shall be sufficient to develop the full tensile strength of the reinforcing bar in accordance with the manufacturer's recommendations. But in no case shall the length of embedded dowel bar be less than 12 inches. All labor and materials associated with drilling holes and filling with adhesive shall be incidental to the unit price bid for "STEEL REINFORCEMENT."

DECK JOINTS: The specified joint size is the maximum joint opening. The joints are designed for a "cold" climate as described in AASHTO 3.12.2.1 (minimum temperature of -30 degrees Fahrenheit and a maximum temperature of 120 degrees Fahrenheit). The existing joints will need to be replaced in phases. Use continuous joint seals from gutter to gutter without splicing whenever possible, even across phase lines. Where splicing is absolutely necessary, follow the manufacturer's instructions and recommendations. Abide by manufacturer's specifications for maximum gland installation temperature and minimum width of the joint at time of installation. The maximum ambient air temperature at the time of gland installation is 85 degrees Fahrenheit.

The joint size specified as a bid item shall be interpreted as the max. size/capacity. The joint size dimensioned on the Layout sheet is intentionally less, and shall be interpreted as the actual constructed opening of the joint if installed at an average ambient temperature of 60° Fahrenheit.

EPOXY SAND SLURRY: Apply epoxy sand slurry treatment in accordance with the Special Note for Bridge Deck Restoration and Waterproofing with Concrete Overlays, and as shown in BGX-009-004.

ABBREVIATIONS: The following abbreviations may have been used in these plans:

Approx.	Approximate	f.s.	Far Side
bet.	Between	HW	High Water
b.f.	Back Face	I.D.	Inside Diameter
bot.	Bottom	I.E.B.	Integral End Bent
Brg.	Bearing	KYTC	Kentucky Transportation Cabinet
c/c	Center to Center	max.	Maximum
Constr.	Construction	O.D.	Outside Diameter
C.E.	Current Edition	Perp.	Perpendicular
CL	Center Line	PGL	Profile Grade Line
Clr.	Clear	PPC	Precast Prestressed Concrete
Dwg.	Drawing	R	Radius
ea.	Each	spa.	Spaces
e.f.	Each Face	Sta.	Station
El.	Elevation	Std.	Standard
Embed.	Embedment	Str.	Straight
eq.	Equal	s/w	Spaced with
Ext.	Exterior	Typ.	Typical
f.f.	Front Face	U.N.O.	Unless Noted Otherwise

SPECIFICATIONS: References to the Specifications, unless otherwise noted, are to the current edition of the Kentucky Transportation Cabinet, Department of Highways, Standard Specifications for Road and Bridge Construction--including any current Supplemental Specifications. All references to the AASHTO Specifications are to the Ninth Edition of the AASHTO LRFD Bridge Design Specifications (2020).

DESIGN LOADS: This bridge is designed for KY HL-93 live load. The KY HL-93 live load is arrived at by increasing the standard HL-93 truck and lane loads as specified in the AASHTO Specifications by 25%. The design also includes 16 PSF for stay-in-place form weight in order to allow the option for concrete filling the flutes/valleys. Contractor shall ensure form weight (including concrete in voids) does not exceed 16 PSF. Concrete in the valleys shall be considered incidental to the project. As an alternative, the Contractor may fill flutes with expanded or extruded polystyrene.

FUTURE WEARING SURFACE: This bridge is designed for a 15 PSF future wearing surface load with a 1.50 load factor at the Strength I limit state.

SEISMIC DESIGN: This bridge is designed for Seismic Performance Zone 1 based on a modified peak ground acceleration coefficient As = 0.200 and a modified response spectral acceleration coefficient SD1 = 0.150 assuming Site Class D.

MATERIAL DESIGN SPECIFICATIONS:

Class "A" Concrete:	f'c = 3,500 psi
Class "A" Modified Concrete:	f'c = 3,500 psi
Class "AA" Concrete:	f'c = 4,000 psi
Steel Reinforcement:	Fy = 60,000 psi
Steel Piling and Structural Steel:	Fy = 50,000 psi
Class "D" Modified Concrete:	See beam sheet

CONCRETE: Class "AA" Concrete shall be used in the deck, railing, median barrier, and pier diaphragms. Class "A" Concrete shall be used in the pier columns, pier caps, and in the end bents. Class "A" Modified Concrete shall be used in the drilled shafts. Class "D" Modified Concrete shall be used in the prestressed beams.

PREFORMED JOINT MATERIAL: All material shall be Type I sponge rubber and meet the requirements of AASHTO M153.

MECHANICAL REINFORCEMENT COUPLERS: Mechanical couplers are required where shown on the plans and at joints between construction phases. Mechanical couplers shall meet ASTM E466 or E606 requirements for fatigue, be in accordance with Section 602 of the Specifications, and provide a mechanical tension splice equivalent to 125 percent of the specified yield strength of the bar being spliced. Where couplers are required, the bar length shown in the bill of reinforcement is the length measured from the center of the construction joint and no adjustment has been made for any reduction or increase in bar length that may be required for the mechanical coupler device. Any additional bar length required for the mechanical splice is to be incidental to the unit price bid for mechanical reinforcement couplers. The estimate of quantities includes the number of test specimens required by 602.03.06 of the Specifications.

BONDED CONSTRUCTION JOINT: Where a bonded construction joint is called for in the plans, new concrete shall be bonded to previously placed (cured) concrete with a two-component epoxy resin system conforming to Sections 511 and 826 of the Specifications. The cost of this work is incidental to the unit bid price for the class concrete being placed.

CONSTRUCTION IDENTIFICATION: The names of the prime contractor and the sub-contractor shall be imprinted in the concrete in accordance with Standard Drawing BGX-006 (current edition) at a location designated by the Engineer. The contractor shall furnish all plans, equipment, and labor necessary to do the work for which no direct payment will be made.

ELASTOMERIC BEARINGS: Elastomeric bearings shall conform to the AASHTO LRFD Bridge Construction Specifications, Section 18 and the AASTHO LRFD Bridge Design Specifications, Section 14. Leveling pads at the integral end bents are unlaminated bearings cut or molded from Grade 3 elastomer with a hardness of 50 durometers. Leveling pads are not required to be load tested. The cost of all elastomeric bearings and shims are to be included in the unit price per linear feet of precast beams.

CONCRETE COATING, MASONRY COATING & CONCRETE SEALER: Apply concrete coating to all exposed concrete (new and old) of End Bent #1 and End Bent #2 in accordance with the Special Note for Concrete Coating.

Apply masonry coating to all exposed concrete (new and old) on Pier #1 and Pier #2. Areas of concrete to be covered by a bearing pad shall receive neither concrete coating or masonry coating. Both concrete coating and masonry coating shall have an identical color of light gray.

CONCRETE SEALING: Apply concrete sealer in accordance with the Special Note for Concrete Sealing. Note that concrete sealers may not be compatible with some concrete curing compounds. Contractor shall take appropriate measures to ensure the sealer penetrates the concrete as intended by the manufacturer.

EXPANSION JOINTS: EMSEAL, strip seal, or a similar type joint is required for this bridge. Neither V-seals or compression seal type joints shall be considered as an option.

BEVELED EDGES: Bevel all exposed edges 3/4", unless otherwise noted.

SHOP DRAWINGS: Submit shop drawings that are required by the plans and specifications directly to the Engineer of Record via email (macy.purcell@hdrinc.com). If any changes in the design plans are proposed by a fabricator or supplier, submit those changes to the Consultant through the Contractor. Submit final, approved plans to KYTC Division of Maintenance in Frankfort.

REINFORCEMENT: Dimensions shown from the face of concrete to bars are to center of bars unless otherwise shown. Spacing of bars is from center to center of bars. Clear distance to face of concrete is 2", unless otherwise noted. Any reinforcing bars designated by suffix (E) in the plans shall be epoxy coated in accordance with Section 811.10 of the Standard Specifications. Any reinforcing bars designated by suffix (S) in a bill of reinforcement shall be considered a stirrup for purposes of bend diameters.

SPIRAL REINFORCEMENT IN COLUMNS: Lap splices of spirals, where desired by the contractor shall be made with a minimum of one and a half turns of spiral. Do not weld any rebar unless it is ASTM A706 rebar. The length of spiral shown in the bill of reinforcement for each pier corresponds with a height measured from the top of shaft to the bottom layer of reinforcement in the pier cap. Additionally, one and one-half closed coils shall be provided at the top of each spiral unit in the column and terminate in the pier cap. Centralizing wheels, cage-stabilizing bars, and additional lap splices of spirals may be needed, but shall be considered incidental to the bid item for Steel Reinforcement or the drilled shaft. Spiral reinforcement shall meet the requirements of subsection 811.02(c) of the Specifications.

SAWCUTTING EXISTING CONCRETE: Portions of the existing superstructure and existing end bents shall be removed and disposed of as part of this project. Prior to the removal of the existing concrete masonry, cut the surface with a concrete saw to a depth of one inch to facilitate a neat line. Include all labor and equipment related to this work in the unit price bid for "REMOVE CONCRETE MASONRY."

STRUCTURE GRANULAR BACKFILL: End bents are to be backfilled with structure granular backfill in accordance with Special Provision 69 and Standard Drawings RGX-100 and RGX-105 (current editions). All labor and materials associated with geotextile fabric and excavation for installation of this material will be considered incidental to the unit price bid for "STRUCTURE GRANULAR BACKFILL".

ARMORED EDGE: Fabricate armored edge to match cross slope and parabolic crown at each end of bridge.

CONCRETE DECK: The deck shall be poured continuously from beginning of bridge to end of bridge before the concrete is allowed to set. This placement sequence may not be changed without the written approval of the designer. Stay-in-place metal forms are allowed. The depth of the deck shown on the plans shall be provided above the forms.

FOUNDATION PREPARATION: Any excavation or other miscellaneous foundation work not already stated as incidental to another bid item shall be included in the lump sum bid for "FOUNDATION PREPARATION".

TEMPORARY SHORING: Temporary shoring will be required at the existing abutments to accommodate phased construction of the new end bents. Temporary shoring, sheeting, and/or dewatering may also be required for the installation of the drilled shafts at the piers. Include the cost for these items in the lump sum bid for "FOUNDATION PREPARATION".

COMPLETION OF THE STRUCTURE: The contractor is required to complete the structure in accordance with the plans and specifications. Material, labor, or construction operations not otherwise specified are to be included in the bid item most appropriate to the work involved. This may include cofferdams, shoring, excavations, backfilling, removal of all or parts of existing structures, phase construction, incidental materials, labor, or anything else required to complete the structure.

DIMENSIONS: Dimensions are for a normal temperature of 60 degrees Fahrenheit. Layout dimensions are horizontal dimensions.

SLOPE PROTECTION: Slope protection shall be utilized at the end bents. The slope protection shall meet the requirements of Sections 703.03.01 D and 805 of the Standard Specifications for Road and Bridge Construction, current edition. A Geotextile Fabric in accordance with Section 843 of the Standard Specifications for Road and Bridge Construction, current edition, shall be placed between the embankment and the slope protection. Any required excavation and all geotextile fabric shall be incidental to the unit price bid for “CRUSHED AGGREGATE SLOPE PROTECTION.”

Embankments at the bridge end bent locations shall be constructed in accordance with Special Provision #69 for Embankment at Bridge End Bent Structures.

MASTIC TAPE: Apply Mastic Tape in accordance with BGX-022. Mastic Tape used to seal joints is to meet the requirements of ASTM C-877 Type I, II, or III. The joint is to be covered with 12-inch wide mastic tape. Prior to application, the joint surface shall be clean and free of dirt, debris, or deleterious material. Primer, if required by the tape manufacturer, shall be applied for a minimum width of nine inches on each side of the joint.
Mastic Tape shall be either:

EZ-WRAP RUBBER by PRESS-SEAL GASKET CORPORATION,
SEAL WRAP by MAR MAC MANUFACTURING CO. INC.,
CADILLOC by the UP RUBBER CO. INC.
or approved equal.

Mastic Tape shall cover the joint continuously unless otherwise shown in the plans. Mastic Tape shall be spliced by lapping a minimum of six inches and in accordance with the manufacturers recommendations with the overlap running downhill. All preformed expansion joint material, caulking, mastic tape, and equipment and labor necessary to complete the joints are incidental to the unit price bid for Class “A” Concrete.

PILE POINTS: Provide pile points as required on the FOUNDATION LAYOUT sheet. Pile points shall be in accordance with Section 604 of the specifications and of the type shown on the pile record sheet.

DRILLED SHAFTS: Drilled Shafts shall be constructed in accordance with the Special Note for Drilled Shafts and the Standard Specifications except that the maximum coarse aggregate size for Class "A" Modified Concrete to be used in drilled shafts is #78. Include all costs (labor, equipment, and materials including spiral and longitudinal reinforcement, reinforcement splices, mechanical couplers, concrete, and temporary or permanent casing) associated with the drilled shafts in the unit price bid for "DRILLED SHAFT - 54" COMMON" or "DRILLED SHAFT - 54" SOLID ROCK" as applicable.

DIMENSIONS & ELEVATIONS: The existing bridge drawing numbers is 16514. All dimensions and elevations given in these plans are based on field surveyed data and dimensions from the old plans. Prior to beginning work or ordering any materials, the contractor shall verify all dimensions and elevations. No claim will be honored by the Department of Highways regarding site conditions.

VERTICAL DATUM: All elevations referenced herein are based on the North American Vertical Datum of 1988 (NAVD). If required, the vertical datum conversion at the site from National Geodetic Vertical Datum of 1929 (NGVD) to NAVD is -0.509 feet.

ON-SITE INSPECTION: Each contractor submitting a bid for this work shall make a thorough inspection of the project site prior to submitting a bid and shall be thoroughly familiarized with existing conditions so that work can be expeditiously performed after a contract is awarded. Submission of a bid will be considered evidence of this inspection having been made. Any claims resulting from site conditions will not be honored by the Department of Highways.

TEMPORARY BRIDGE FLOORING: Provide flooring for workers in situations where the danger from a fall is compounded by the traffic and for protection to the traffic. If temporary flooring is necessary in addition to deck forms, the flooring is to be designed using the sum of dead load and live vertical loads. Include 50 PSF on horizontal surfaces and the weight of any material or equipment that is placed or allowed to fall during construction or demolition in the live load computation. Submit flooring design along with the falsework design to KYTC for approval. Temporary flooring shall be installed as soon as practicable after beams are set. Extend temporary flooring across traffic lanes, ramps, and usable shoulders of highways. Consider all phases of furnishing and removing the floorings as incidental to the Contract. This item may be considered in addition to any requirement set forth in subsection 107.01.01 of the Specifications.

No separate measurement or payment will be made for providing and subsequently removing temporary bridge flooring as this is considered incidental to the Contract. The requirement for temporary bridge flooring is waived when stay-in-place deck forms are used.

DAMAGE TO STRUCTURE: The contractor shall bear all responsibility and expense for any and all damage to the structure during repair work, even to the removal and replacement of the entire structure, should it be damaged by the contractors actions or inaction.

COMMON EXCAVATION: Include all labor and materials for common excavation in the lump sum bid price for "FOUNDATION PREPARATION."

DOWELING REINFORCING STEEL INTO EXISTING CONCRETE: Where shown on the Plans, drill and use an epoxy adhesive for bonding new reinforcement into existing concrete using a two component epoxy resin system conforming to Section 826 of the Specifications. Embedment of the reinforcing steel shall be sufficient to develop the full tensile strength of the reinforcing bar in accordance with the manufacturer's recommendations. But in no case shall the length of embedded dowel bar be less than 12 inches. All labor and materials associated with drilling holes and filling with adhesive shall be incidental to the unit price bid for "STEEL REINFORCEMENT."

DECK JOINTS: The specified joint size is the maximum joint opening. The joints are designed for a "cold" climate as described in AASHTO 3.12.2.1 (minimum temperature of -30 degrees Fahrenheit and a maximum temperature of 120 degrees Fahrenheit). The existing joints will need to be replaced in phases. Use continuous joint seals from gutter to gutter without splicing whenever possible, even across phase lines. Where splicing is absolutely necessary, follow the manufacturer's instructions and recommendations. Abide by manufacturer's specifications for maximum gland installation temperature and minimum width of the joint at time of installation. The maximum ambient air temperature at the time of gland installation is 85 degrees Fahrenheit.

The joint size specified as a bid item shall be interpreted as the max. size/capacity. The joint size dimensioned on the Layout sheet is intentionally less, and shall be interpreted as the actual constructed opening of the joint if installed at an average ambient temperature of 60° Fahrenheit.

EPOXY SAND SLURRY: Apply epoxy sand slurry treatment in accordance with the Special Note for Bridge Deck Restoration and Waterproofing with Concrete Overlays, and as shown in BGX-009-004.

ABBREVIATIONS: The following abbreviations may have been used in these plans:

Approx.	Approximate	f.s.	Far Side
bet.	Between	HW	High Water
b.f.	Back Face	I.D.	Inside Diameter
bot.	Bottom	I.E.B.	Integral End Bent
Brg.	Bearing	KYTC	Kentucky Transportation Cabinet
c/c	Center to Center	max.	Maximum
Constr.	Construction	O.D.	Outside Diameter
C.E.	Current Edition	Perp.	Perpendicular
CL	Center Line	PGL	Profile Grade Line
Clr.	Clear	PPC	Precast Prestressed Concrete
Dwg.	Drawing	R	Radius
ea.	Each	spa.	Spaces
e.f.	Each Face	Sta.	Station
El.	Elevation	Std.	Standard
Embed.	Embedment	Str.	Straight
eq.	Equal	s/w	Spaced with
Ext.	Exterior	Typ.	Typical
f.f.	Front Face	U.N.O.	Unless Noted Otherwise

NOTE: Remove cross-hatched area of the existing structure. Clean and straighten protruding reinforcement to allow proper bonding to new concrete. Include all cost associated with this work in the bid for Remove Concrete Masonry.

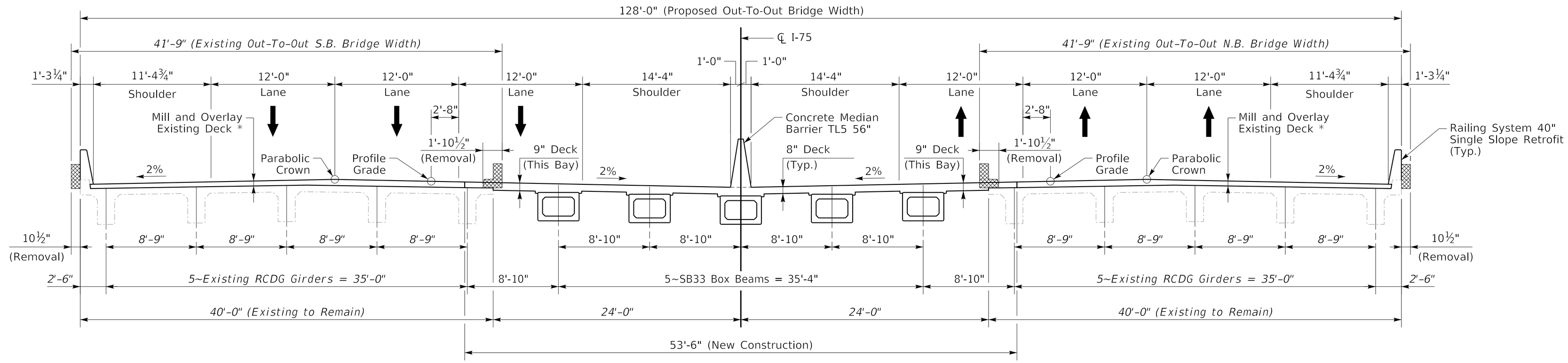

TYPICAL SECTION

(Looking Ahead Station)

* The proposed crown point is shifted over 2'-8" from the existing crown point, resulting in a varying depth of milling and overlay required. Mill 1" min. up to 1¼" max. off the top of the exisiting concrete deck and overlay with Class "AA" Concrete to the Proposed Grade elevations.

NOTE: Remove cross-hatched area of the existing structure. Clean and straighten protruding reinforcement to allow proper bonding to new concrete. Include all cost associated with this work in the bid for Remove Concrete Masonry.

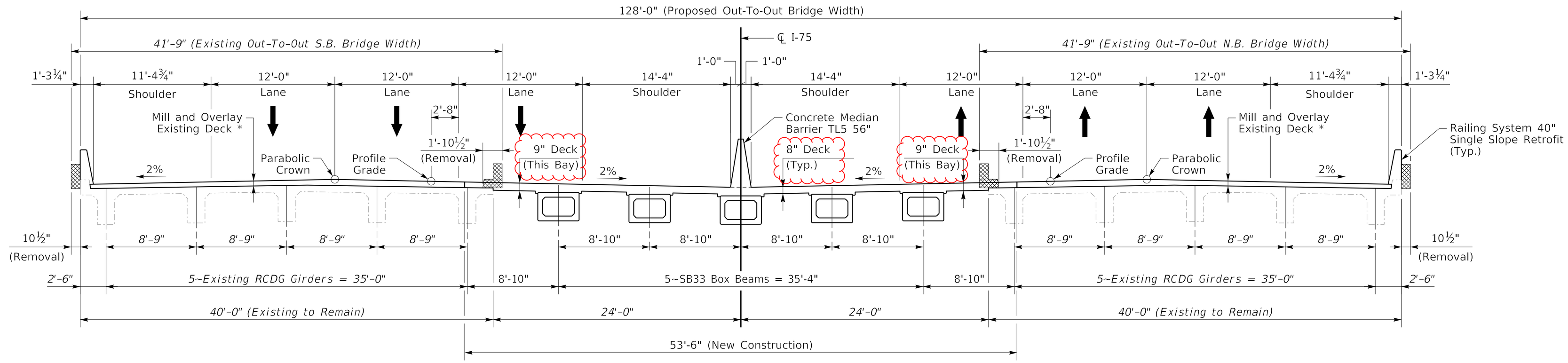

TYPICAL SECTION

(Looking Ahead Station)

* The proposed crown point is shifted over 2'-8" from the existing crown point, resulting in a varying depth of milling and overlay required. Mill 1" min. up to 1¼" max. off the top of the exisiting concrete deck and overlay with Class "AA" Concrete to the Proposed Grade elevations.

COMMONWEALTH OF KENTUCKY DEPARTMENT OF HIGHWAYS TEAM KENTUCKY TRANSPORTATION CABINET	REVISION	DATE	PREPARED BY	DATE: March, 2025	CHECKED BY	BRIDGE LAYOUT (2 OF 2)	ROUTE	ITEM NO. 11-14.8	COUNTY OF WHITLEY
	CHANGE OVERLAY TO "AA" CONCRETE	07/21/2025	HDR	DESIGNED BY: M. Purcell	W. Hagerman	CROSSING US 25W	I-75	SHEET NO. S4	DRAWING NUMBER 25767
				DETAILED BY: J. Perry	M. Purcell				

MicroStation v10.16.3.31 USER: LDECKER DATE PLOTTED: 7/21/2025 FILE NAME: 11_14_80_S25767_S03-S04.dgn

NOTE: Remove cross-hatched area of the existing structure. Clean and straighten protruding reinforcement to allow proper bonding to new concrete. Include all cost associated with this work in the bid for Remove Concrete Masonry.

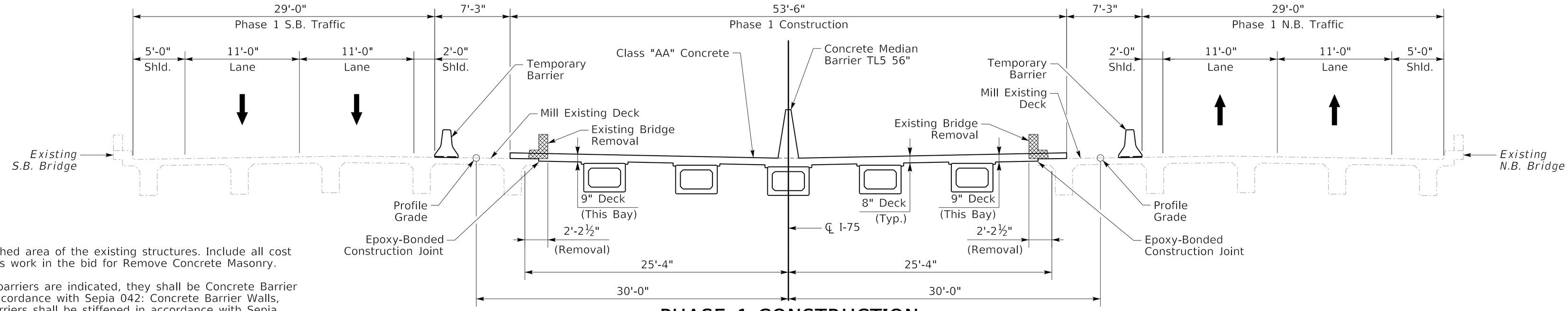

PHASE 1 CONSTRUCTION

(Looking Ahead Station)

NOTES:

Remove cross-hatched area of the existing structures. Include all cost associated with this work in the bid for Remove Concrete Masonry.

Where temporary barriers are indicated, they shall be Concrete Barrier Wall Type 9T in accordance with Sepia 042: Concrete Barrier Walls, Sheet 013. The barriers shall be stiffened in accordance with Sepia 042: Concrete Barrier Walls, Sheet 014, along the entire length of the bridge including shoring limits for end bent construction.

Distance from the construction joint in deck to base of temporary barrier shall be no less than 12".

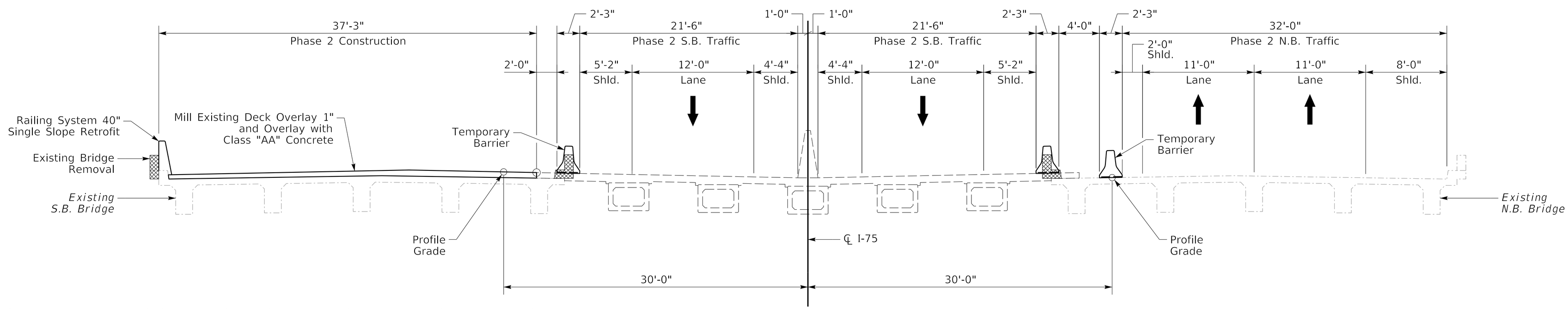

PHASE 2 CONSTRUCTION

(Looking Ahead Station)

NOTES:

Construction of this bridge and removal of portions of the existing bridges is to be accomplished in phases in accordance with these plans and the Roadway Maintenance of Traffic Plans. The Construction Phasing sequence for this bridge is as follows:

Phase 1: Install a temporary barrier and maintain traffic on the existing Northbound and Southbound bridges. Remove existing inside barrier rail and portions of existing deck to extents shown on both bridges. Remove associated portions of the existing end bents as needed. Care shall be taken to minimize damage to the remaining existing structures during Phase 1 removal. Construct the new deck, connecting the two bridges, and median barrier rail. Mill portions of the existing bridge decks as shown.

Phase 2: Maintain traffic on the existing N.B. bridge. Install temporary barriers and maintain S.B. traffic on the newly constructed bridge. Note, S.B. traffic lanes shall be split by the median barrier along the bridge. Remove existing outside S.B. barrier rails and portions of existing S.B. deck to extents shown. Remove associated portions of the existing end bents as needed for barrier rail replacement on the wingwalls. Care shall be taken to minimize damage to the remaining existing structures during Phase 2 removal. Construct the new deck overhang and outside barrier rail. Mill the remaining portion of the existing S.B. bridge deck overlay 1". Overlay the existing S.B. deck with Class "AA" Concrete to match proposed bridge profile grade.

Phase 3: Shift S.B. traffic from newly constructed bridge to existing S.B. bridge as shown. Shift N.B. traffic to the newly constructed bridge. Note, N.B. traffic lanes shall be split by the median barrier along the bridge. Remove existing outside N.B. barrier rails and portions of existing N.B. deck to extents shown. Remove associated portions of the existing end bents as needed for barrier rail replacement on the wingwalls. Care shall be taken to minimize damage to the remaining existing structures during Phase 3 removal. Construct the new deck overhang and outside barrier rail. Mill the remaining portion of the existing N.B. bridge deck overlay 1". Overlay the existing N.B. deck with Class "AA" Concrete to match proposed bridge profile grade.

NOTE: Remove cross-hatched area of the existing structure. Clean and straighten protruding reinforcement to allow proper bonding to new concrete. Include all cost associated with this work in the bid for Remove Concrete Masonry.

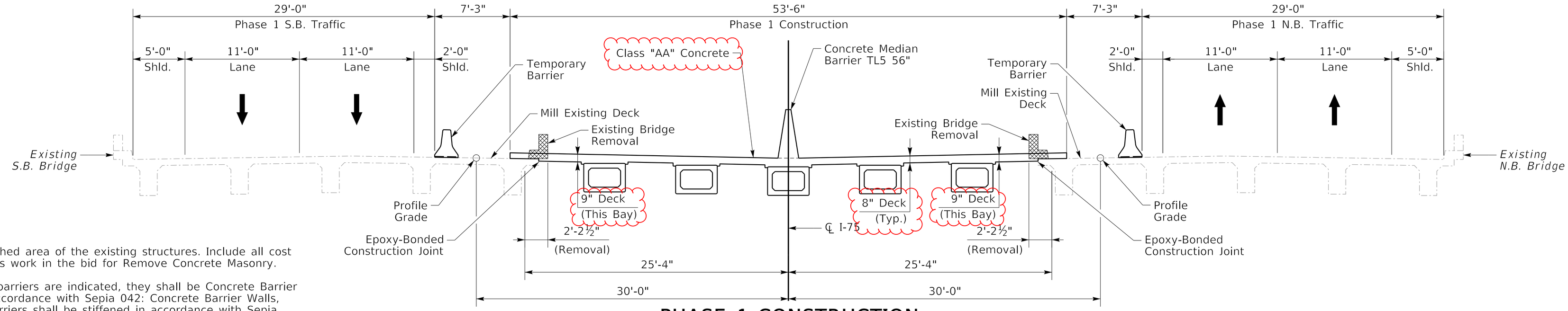

PHASE 1 CONSTRUCTION

(Looking Ahead Station)

NOTES:

Remove cross-hatched area of the existing structures. Include all cost associated with this work in the bid for Remove Concrete Masonry.

Where temporary barriers are indicated, they shall be Concrete Barrier Wall Type 9T in accordance with Sepia 042: Concrete Barrier Walls, Sheet 013. The barriers shall be stiffened in accordance with Sepia 042: Concrete Barrier Walls, Sheet 014, along the entire length of the bridge including shoring limits for end bent construction.

Distance from the construction joint in deck to base of temporary barrier shall be no less than 12".

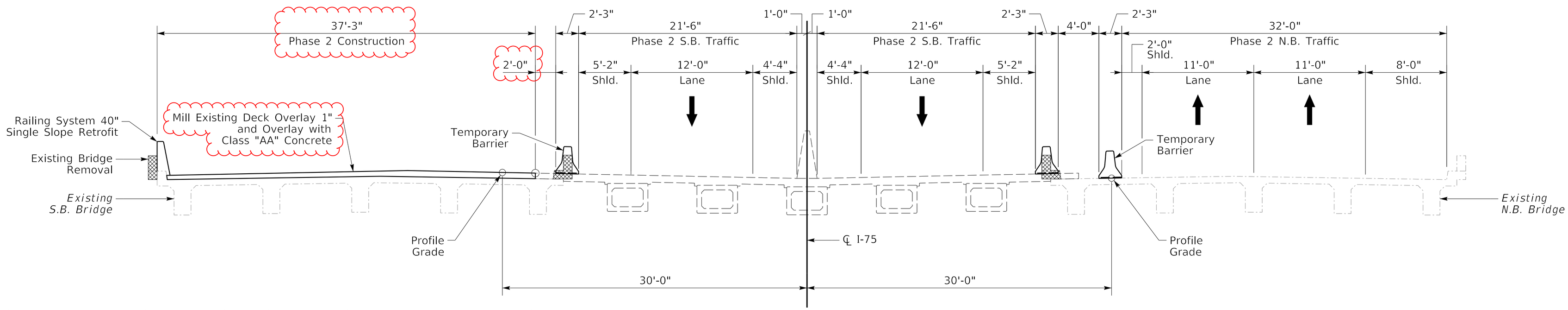

PHASE 2 CONSTRUCTION

(Looking Ahead Station)

NOTES:

Construction of this bridge and removal of portions of the existing bridges is to be accomplished in phases in accordance with these plans and the Roadway Maintenance of Traffic Plans. The Construction Phasing sequence for this bridge is as follows:

Phase 1: Install a temporary barrier and maintain traffic on the existing Northbound and Southbound bridges. Remove existing inside barrier rail and portions of existing deck to extents shown on both bridges. Remove associated portions of the existing end bents as needed. Care shall be taken to minimize damage to the remaining existing structures during Phase 1 removal. Construct the new deck, connecting the two bridges, and median barrier rail. Mill portions of the existing bridge decks as shown.

Phase 2: Maintain traffic on the existing N.B. bridge. Install temporary barriers and maintain S.B. traffic on the newly constructed bridge. Note, S.B. traffic lanes shall be split by the median barrier along the bridge. Remove existing outside S.B. barrier rails and portions of existing S.B. deck to extents shown. Remove associated portions of the existing end bents as needed for barrier rail replacement on the wingwalls. Care shall be taken to minimize damage to the remaining existing structures during Phase 2 removal. Construct the new deck overhang and outside barrier rail. Mill the remaining portion of the existing S.B. bridge deck overlay 1". Overlay the existing S.B. deck with Class "AA" Concrete to match proposed bridge profile grade.

Phase 3: Shift S.B. traffic from newly constructed bridge to existing S.B. bridge as shown. Shift N.B. traffic to the newly constructed bridge. Note, N.B. traffic lanes shall be split by the median barrier along the bridge. Remove existing outside N.B. barrier rails and portions of existing N.B. deck to extents shown. Remove associated portions of the existing end bents as needed for barrier rail replacement on the wingwalls. Care shall be taken to minimize damage to the remaining existing structures during Phase 3 removal. Construct the new deck overhang and outside barrier rail. Mill the remaining portion of the existing N.B. bridge deck overlay 1". Overlay the existing N.B. deck with Class "AA" Concrete to match proposed bridge profile grade.

NOTE: Remove cross-hatched area of the existing structure. Clean and straighten protruding reinforcement to allow proper bonding to new concrete. Include all cost associated with this work in the bid for Remove Concrete Masonry.

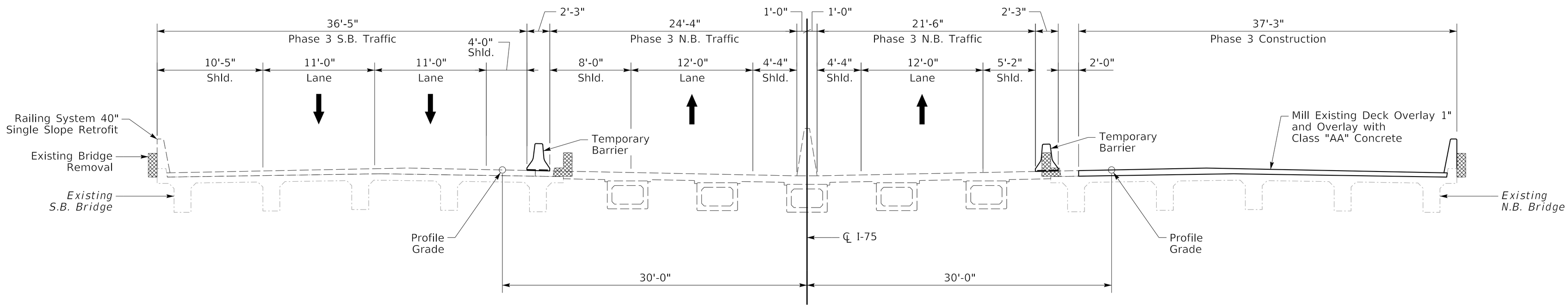

PHASE 3 CONSTRUCTION

(Looking Ahead Station)

NOTES:

Remove cross-hatched area of the existing structures. Include all cost associated with this work in the bid for Remove Concrete Masonry.

Where temporary barriers are indicated, they shall be Concrete Barrier Wall Type 9T in accordance with Sepia 042: Concrete Barrier Walls, Sheet 013. The barriers shall be stiffened in accordance with Sepia 042: Concrete Barrier Walls, Sheet 014, along the entire length of the bridge including shoring limits for end bent construction.

Distance from the construction joint in deck to base of temporary barrier shall be no less than 12".

Construction of this bridge and removal of portions of the existing bridges is to be accomplished in phases in accordance with these plans and the Roadway Maintenance of Traffic Plans. The Construction Phasing sequence for this bridge is as follows:

Phase 1: Install a temporary barrier and maintain traffic on the existing Northbound and Southbound bridges. Remove existing inside barrier rail and portions of existing deck to extents shown on both bridges. Remove associated portions of the existing end bents as needed. Care shall be taken to minimize damage to the remaining existing structures during Phase 1 removal. Construct the new deck, connecting the two bridges, and median barrier rail. Mill portions of the existing bridge decks as shown.

Phase 2: Maintain traffic on the existing N.B. bridge. Install temporary barriers and maintain S.B. traffic on the newly constructed bridge. Note, S.B. traffic lanes shall be split by the median barrier along the bridge. Remove existing outside S.B. barrier rails and portions of existing S.B. deck to extents shown. Remove associated portions of the existing end bents as needed for barrier rail replacement on the wingwalls. Care shall be taken to minimize damage to the remaining existing structures during Phase 2 removal. Construct the new deck overhang and outside barrier rail. Mill the remaining portion of the existing S.B. bridge deck overlay 1". Overlay the existing S.B. deck with Class "AA" Concrete to match proposed bridge profile grade.

Phase 3: Shift S.B. traffic from newly constructed bridge to existing S.B. bridge as shown. Shift N.B. traffic to the newly constructed bridge. Note, N.B. traffic lanes shall be split by the median barrier along the bridge. Remove existing outside N.B. barrier rails and portions of existing N.B. deck to extents shown. Remove associated portions of the existing end bents as needed for barrier rail replacement on the wingwalls. Care shall be taken to minimize damage to the remaining existing structures during Phase 3 removal. Construct the new deck overhang and outside barrier rail. Mill the remaining portion of the existing N.B. bridge deck overlay 1". Overlay the existing N.B. deck with Class "AA" Concrete to match proposed bridge profile grade.

NOTE: Remove cross-hatched area of the existing structure. Clean and straighten protruding reinforcement to allow proper bonding to new concrete. Include all cost associated with this work in the bid for Remove Concrete Masonry.

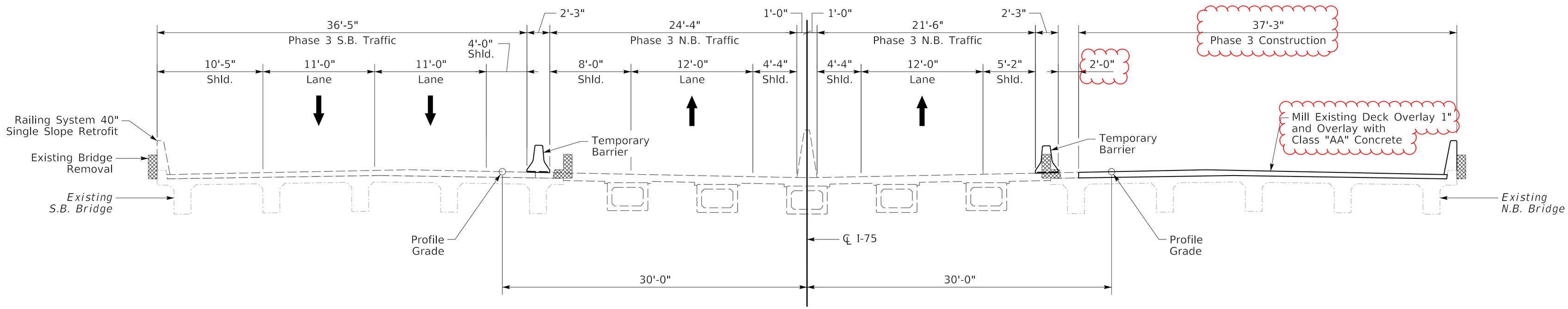

PHASE 3 CONSTRUCTION

(Looking Ahead Station)

NOTES:

Remove cross-hatched area of the existing structures. Include all cost associated with this work in the bid for Remove Concrete Masonry.

Where temporary barriers are indicated, they shall be Concrete Barrier Wall Type 9T in accordance with Sepia 042: Concrete Barrier Walls, Sheet 013. The barriers shall be stiffened in accordance with Sepia 042: Concrete Barrier Walls, Sheet 014, along the entire length of the bridge including shoring limits for end bent construction.

Distance from the construction joint in deck to base of temporary barrier shall be no less than 12".

Construction of this bridge and removal of portions of the existing bridges is to be accomplished in phases in accordance with these plans and the Roadway Maintenance of Traffic Plans. The Construction Phasing sequence for this bridge is as follows:

Phase 1: Install a temporary barrier and maintain traffic on the existing Northbound and Southbound bridges. Remove existing inside barrier rail and portions of existing deck to extents shown on both bridges. Remove associated portions of the existing end bents as needed. Care shall be taken to minimize damage to the remaining existing structures during Phase 1 removal. Construct the new deck, connecting the two bridges, and median barrier rail. Mill portions of the existing bridge decks as shown.

Phase 2: Maintain traffic on the existing N.B. bridge. Install temporary barriers and maintain S.B. traffic on the newly constructed bridge. Note, S.B. traffic lanes shall be split by the median barrier along the bridge. Remove existing outside S.B. barrier rails and portions of existing S.B. deck to extents shown. Remove associated portions of the existing end bents as needed for barrier rail replacement on the wingwalls. Care shall be taken to minimize damage to the remaining existing structures during Phase 2 removal. Construct the new deck overhang and outside barrier rail. Mill the remaining portion of the existing S.B. bridge deck overlay 1". Overlay the existing S.B. deck with Class "AA" Concrete to match proposed bridge profile grade.

Phase 3: Shift S.B. traffic from newly constructed bridge to existing S.B. bridge as shown. Shift N.B. traffic to the newly constructed bridge. Note, N.B. traffic lanes shall be split by the median barrier along the bridge. Remove existing outside N.B. barrier rails and portions of existing N.B. deck to extents shown. Remove associated portions of the existing end bents as needed for barrier rail replacement on the wingwalls. Care shall be taken to minimize damage to the remaining existing structures during Phase 3 removal. Construct the new deck overhang and outside barrier rail. Mill the remaining portion of the existing N.B. bridge deck overlay 1". Overlay the existing N.B. deck with Class "AA" Concrete to match proposed bridge profile grade.

NOTES:

For more information, see the Special Note for Bearing Replacement.

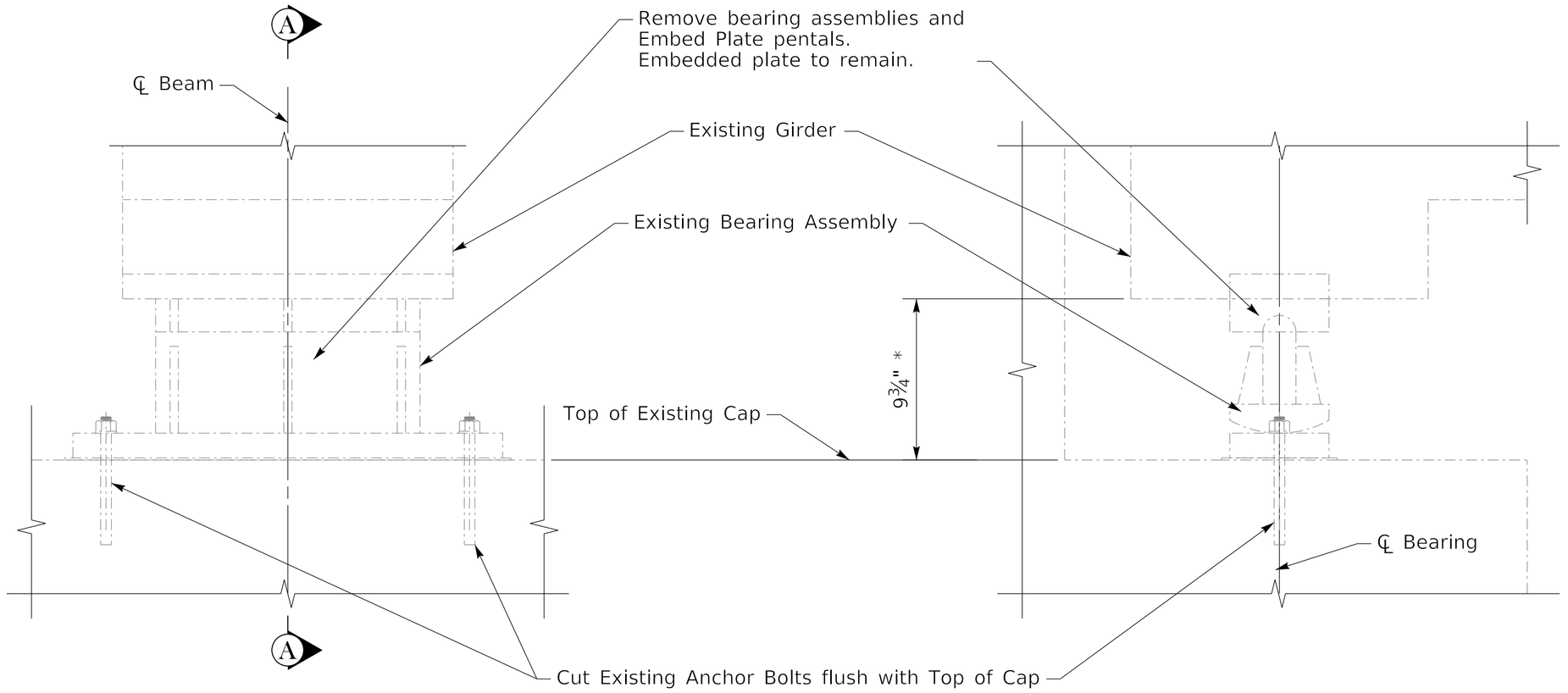

FRONT ELEVATION

(Existing)

SECTION A-A

(Existing)

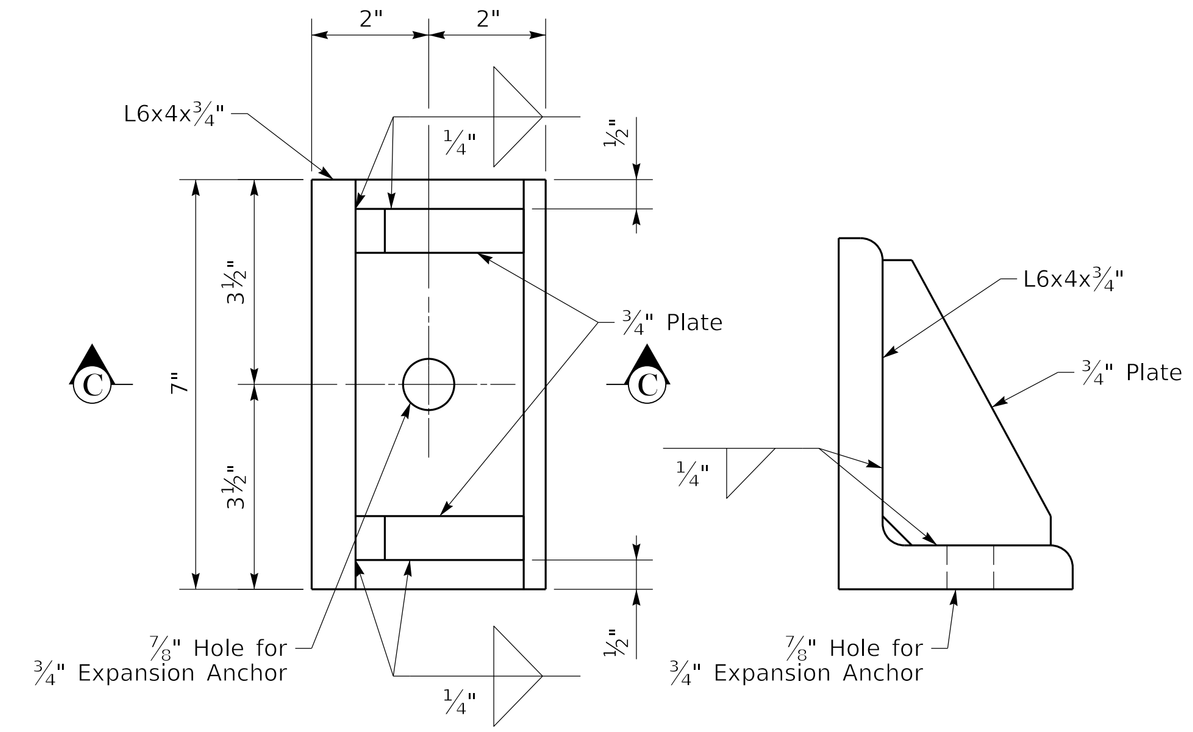

PLAN

SECTION C-C

DETAIL A

(Shear Transfer Device)

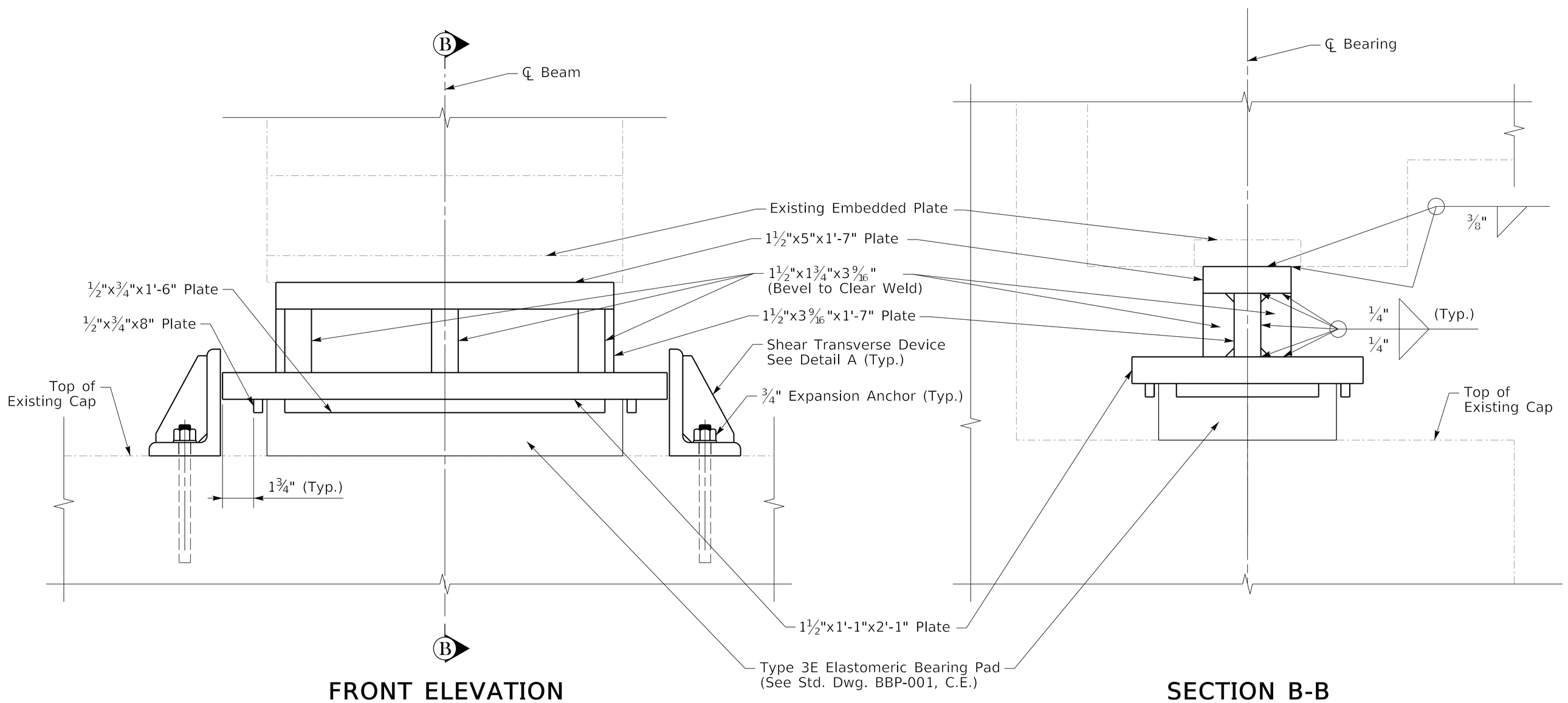

FRONT ELEVATION

(Proposed)

SECTION B-B

(Proposed)

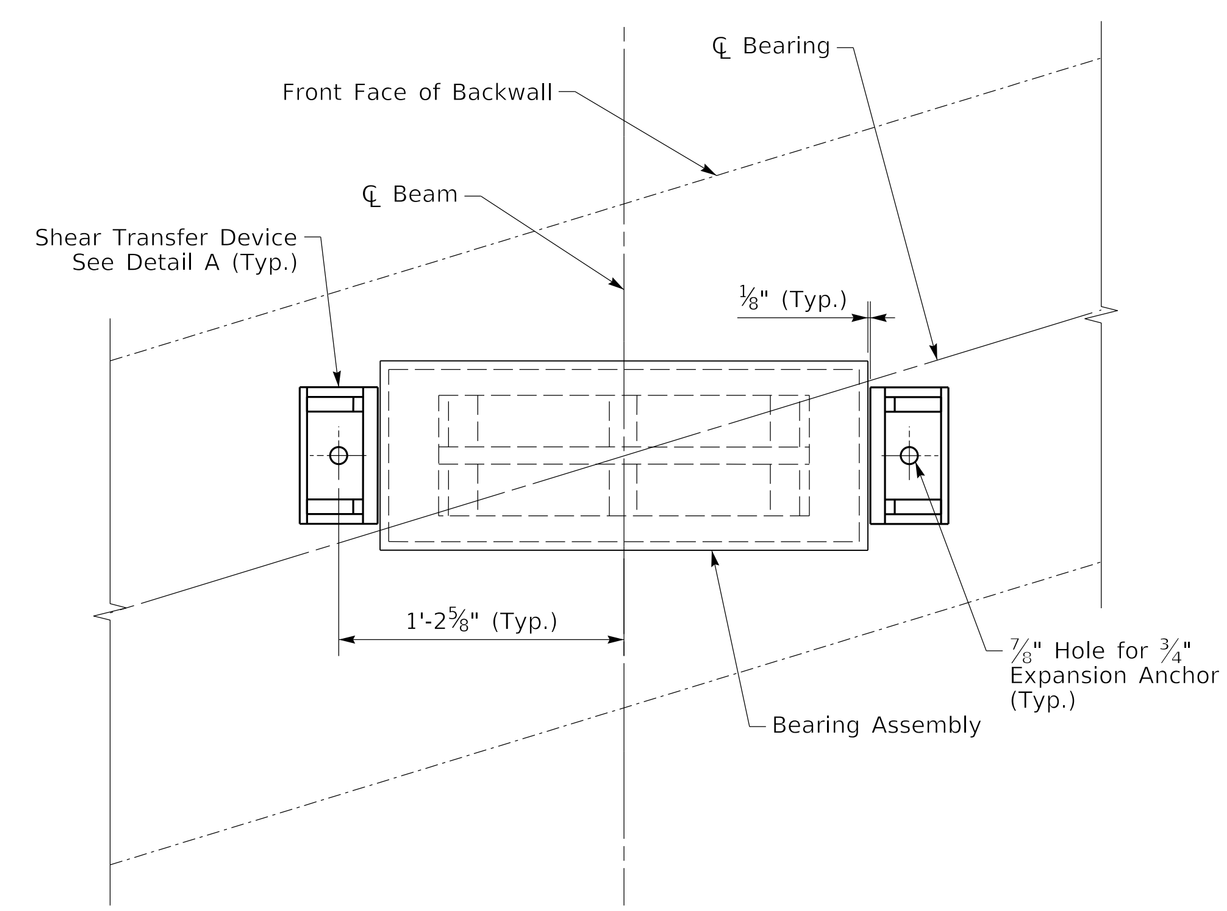

PLAN

(Proposed)

COMMONWEALTH OF KENTUCKY DEPARTMENT OF HIGHWAYS TEAM KENTUCKY TRANSPORTATION CABINET	REVISION	DATE	PREPARED BY HDR	DATE: March, 2025	CHECKED BY	*BEARING REPLACEMENT*	ROUTE	ITEM NO. 11-14.8 / COUNTY OF WHITLEY
				DESIGNED BY: L. Decker	M. Purcell	CROSSING US 25W	I-75	SHEET NO. S27 / DRAWING NUMBER 25767
				DETAILED BY: L. Decker	M. Purcell			

NOTES:

For more information, see the Special Note for Bearing Replacement.

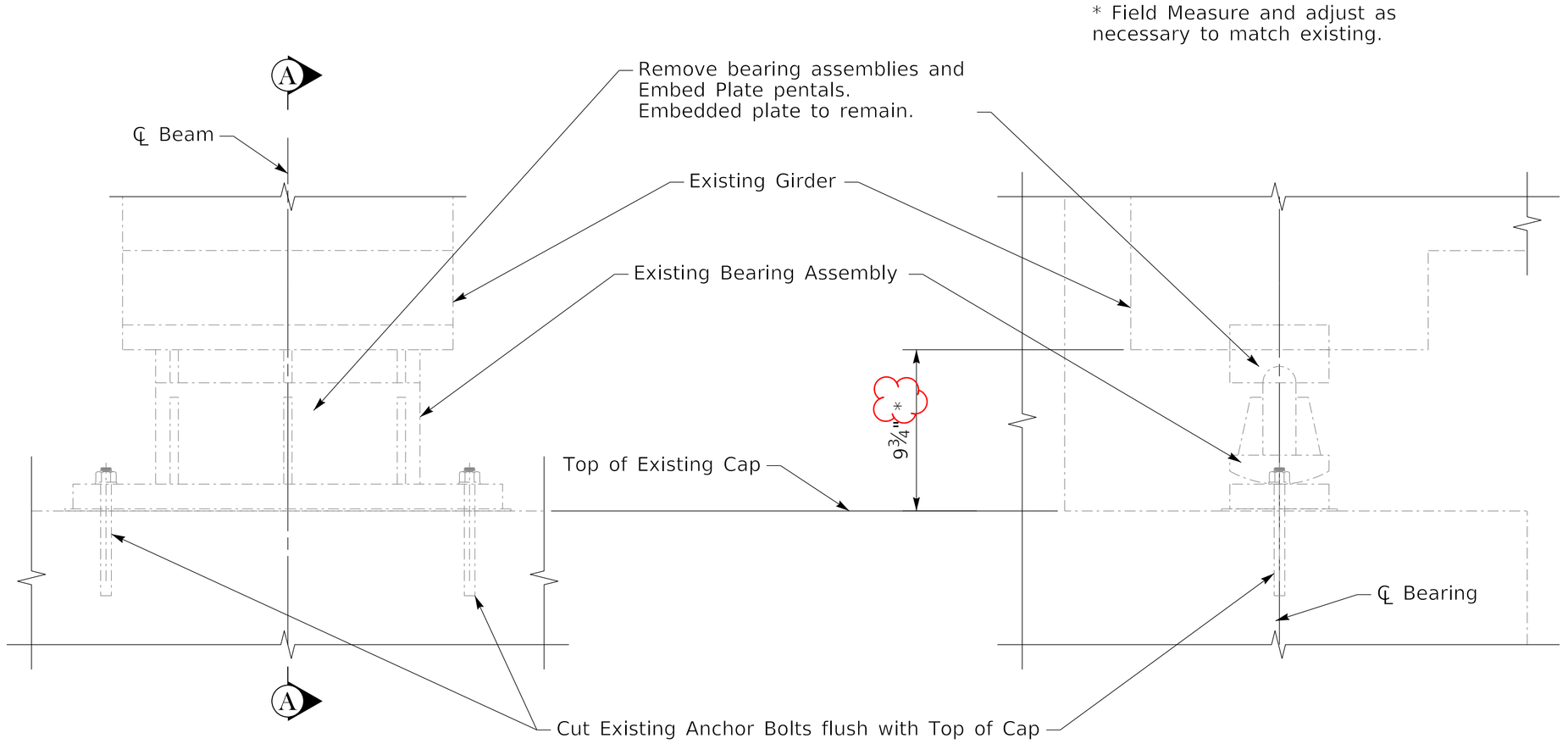

FRONT ELEVATION

(Existing)

SECTION A-A

(Existing)

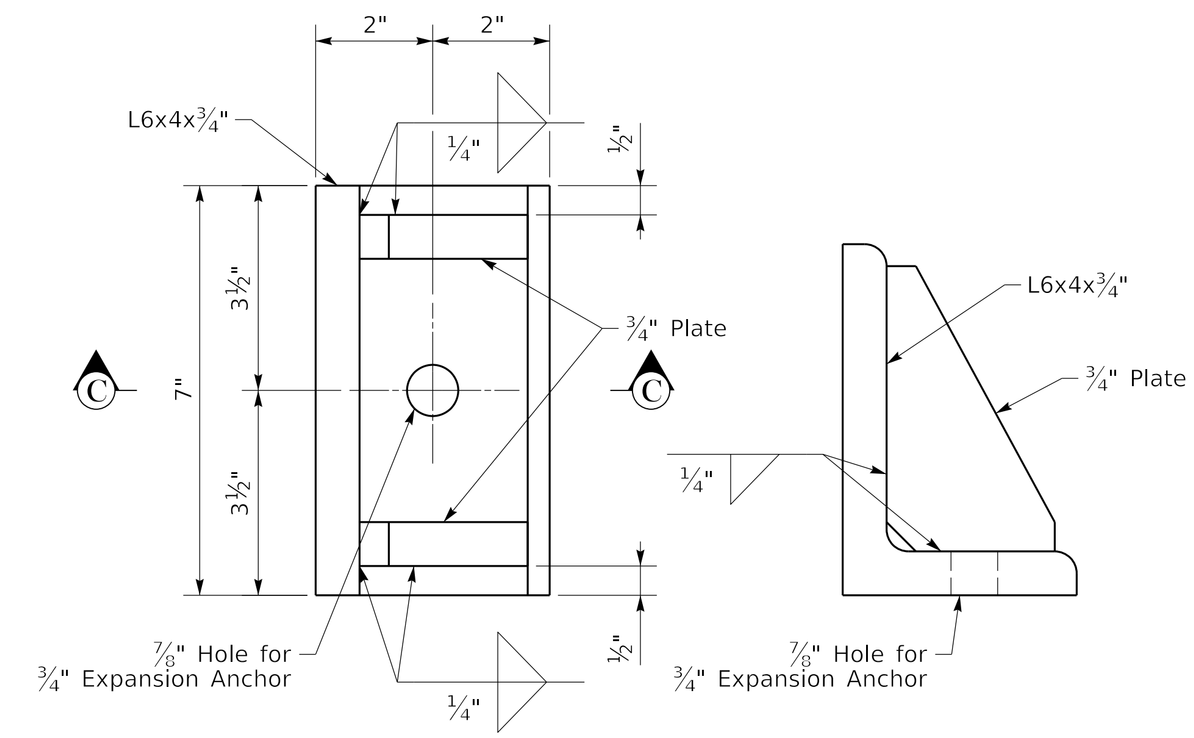

PLAN

SECTION C-C

DETAIL A

(Shear Transfer Device)

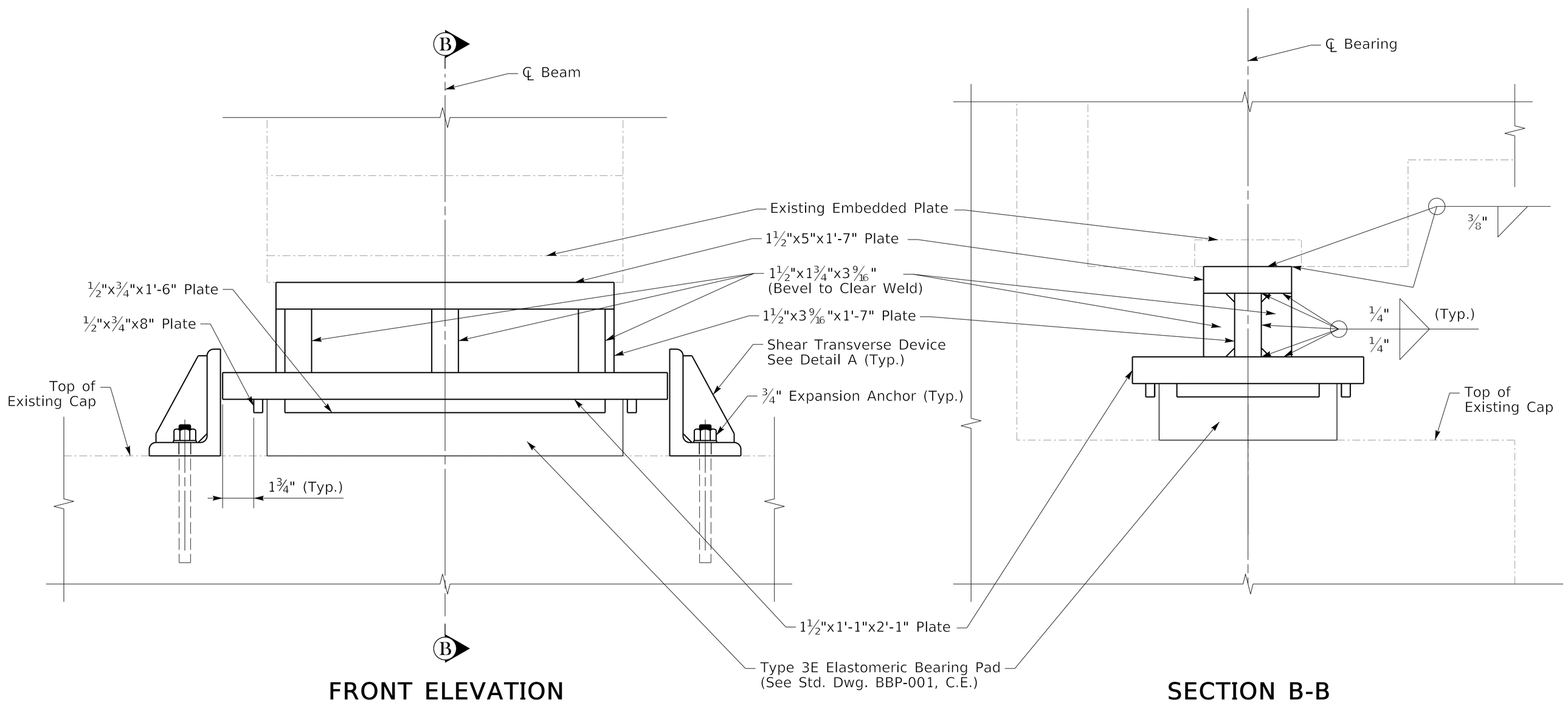

FRONT ELEVATION

(Proposed)

SECTION B-B

(Proposed)

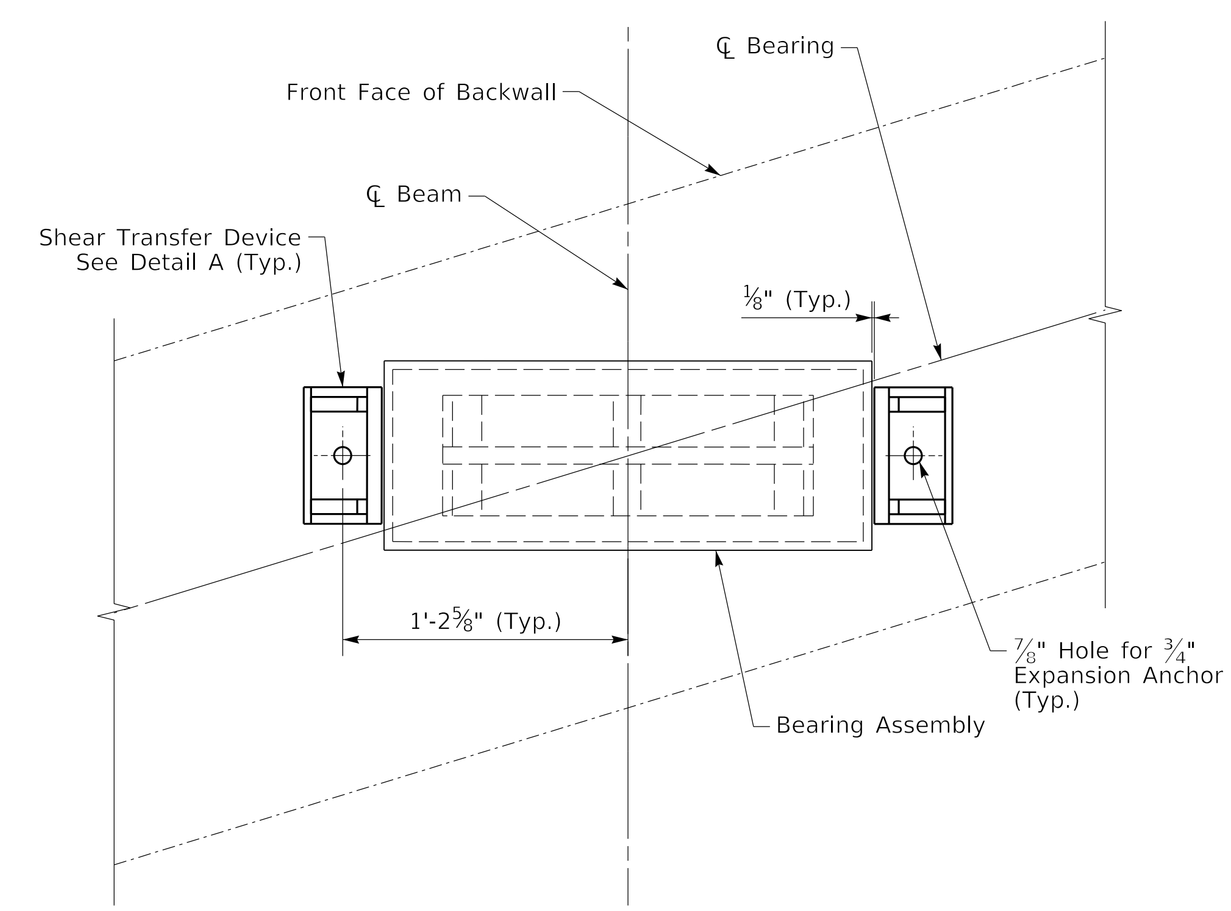

PLAN

(Proposed)

COMMONWEALTH OF KENTUCKY DEPARTMENT OF HIGHWAYS TEAM KENTUCKY TRANSPORTATION CABINET	REVISION	DATE	PREPARED BY HDR	DATE: March, 2025	CHECKED BY	BEARING REPLACEMENT	ROUTE	ITEM NO.
	CALLOUT ADDED	07/21/2025		DESIGNED BY: L. Decker	M. Purcell	CROSSING	I-75	11-14.8
				DETAILED BY: L. Decker	M. Purcell	US 25W		COUNTY OF WHITLEY
							SHEET NO. S27	DRAWING NUMBER 25767

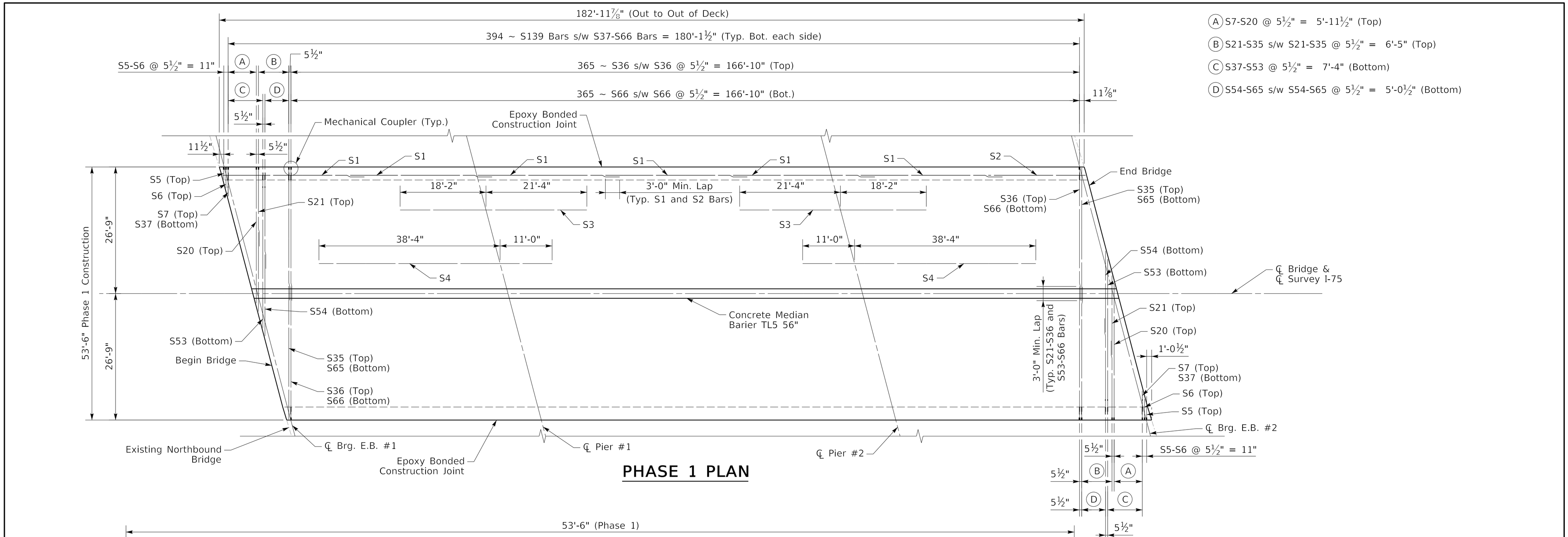

PHASE 1 PLAN

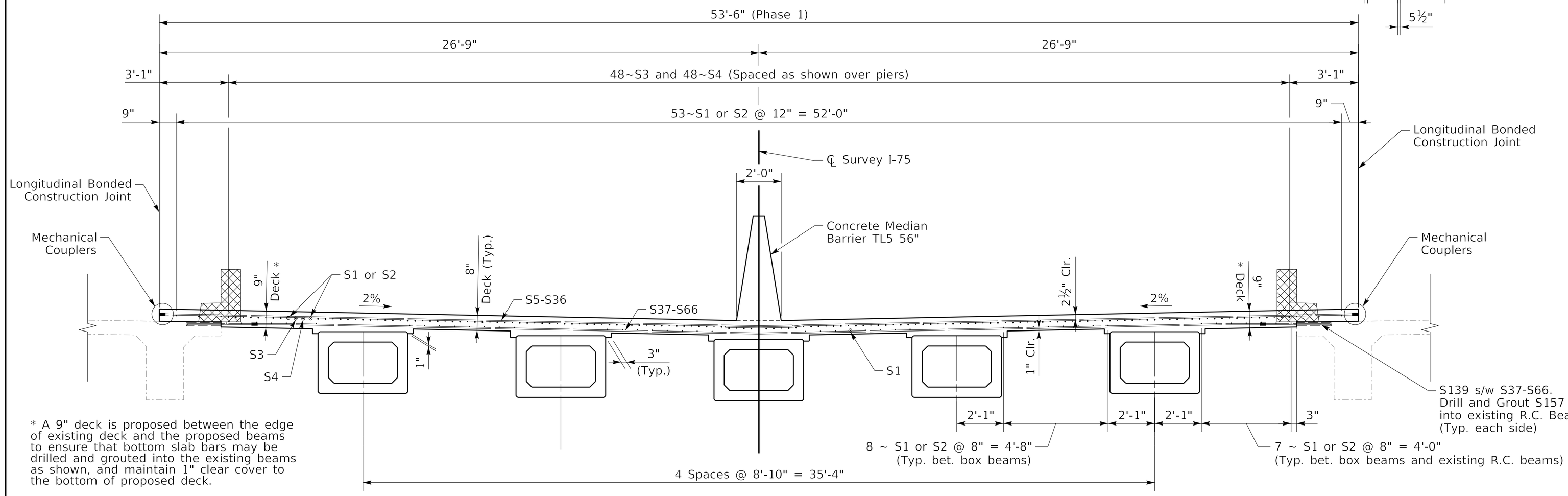

* A 9" deck is proposed between the edge of existing deck and the proposed beams to ensure that bottom slab bars may be drilled and grouted into the existing beams as shown, and maintain 1" clear cover to the bottom of proposed deck.

PHASE 1 SECTION

(Looking Ahead Station)

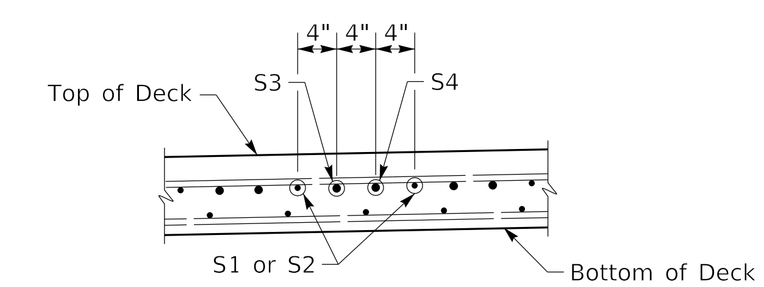

ADDITIONAL LONG. REINFORCING AT PIERS

Typical All Phases

NOTE: Remove cross-hatched area of the existing structure. Include all cost associated with this work in the bid item for Remove Concrete Masonry.

COMMONWEALTH OF KENTUCKY DEPARTMENT OF HIGHWAYS	REVISION	DATE	PREPARED BY HDR	DATE: March, 2025	CHECKED BY	SUPERSTRUCTURE (1 OF 5)	ROUTE	ITEM NO. 11-14.8	COUNTY OF WHITLEY
				DESIGNED BY: R. Richardson Jr.	M. Purcell	CROSSING US 25W	I-75	SHEET NO. S30	DRAWING NUMBER 25767
				DETAILED BY: L. Decker	M. Purcell				

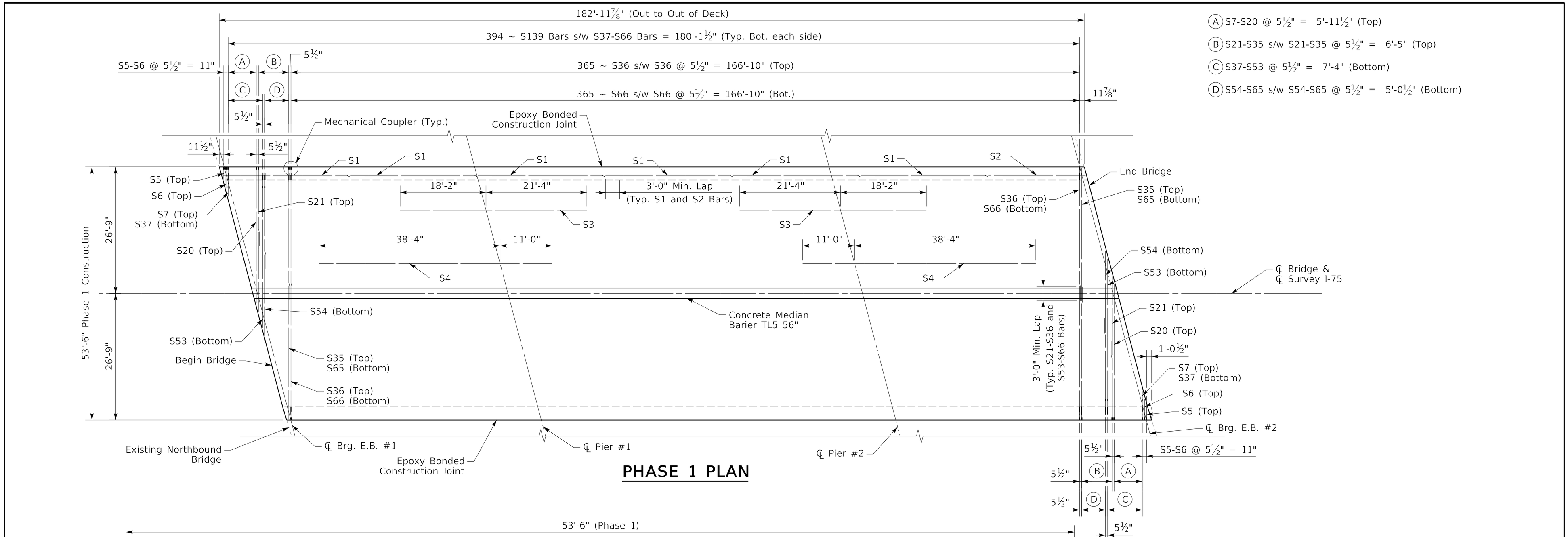

PHASE 1 PLAN

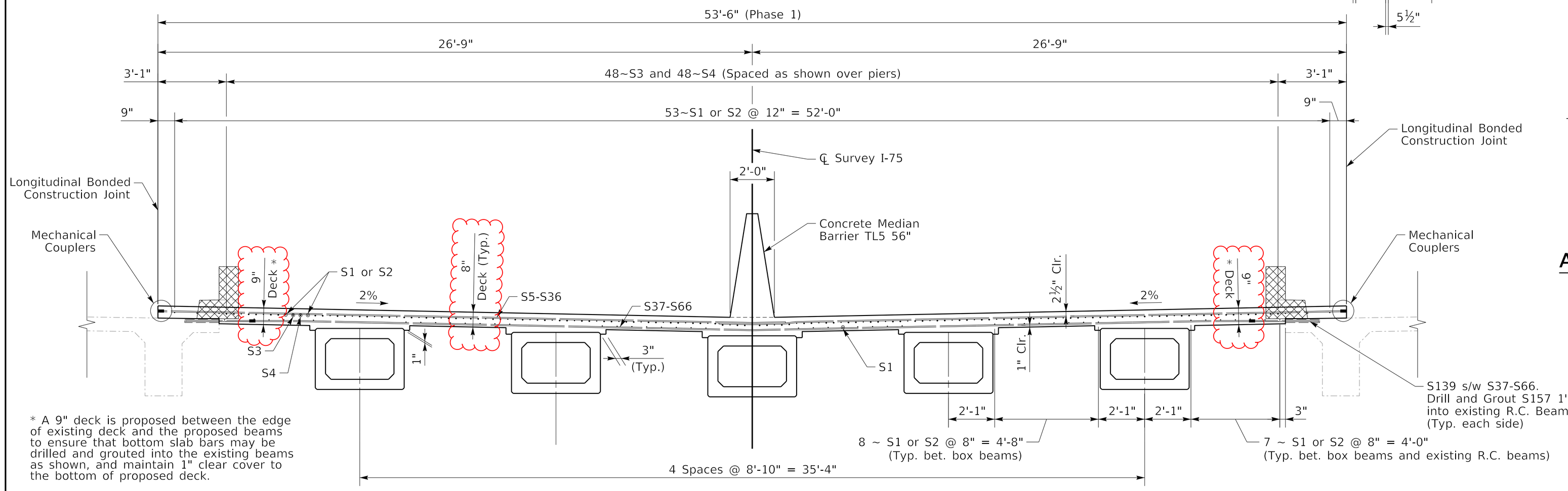

* A 9" deck is proposed between the edge of existing deck and the proposed beams to ensure that bottom slab bars may be drilled and grouted into the existing beams as shown, and maintain 1" clear cover to the bottom of proposed deck.

PHASE 1 SECTION

(Looking Ahead Station)

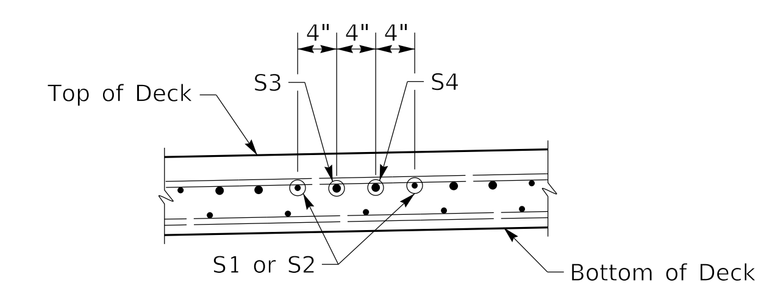

ADDITIONAL LONG. REINFORCING AT PIERS

Typical All Phases

NOTE: Remove cross-hatched area of the existing structure. Include all cost associated with this work in the bid item for Remove Concrete Masonry.

COMMONWEALTH OF KENTUCKY DEPARTMENT OF HIGHWAYS	REVISION	DATE	PREPARED BY	DATE: March, 2025	CHECKED BY	SUPERSTRUCTURE (1 OF 5)	ROUTE	ITEM NO. 11-14.8 / COUNTY OF WHITLEY
	CHANGE OVERLAY TO "AA" CONCRETE	07/21/2025	HDR	DESIGNED BY: R. Richardson Jr.	M. Purcell	CROSSING US 25W	I-75	SHEET NO. S30 / DRAWING NUMBER 25767
				DETAILED BY: L. Decker	M. Purcell			

MicroStation v10.16.3.31 USER: LDECKER DATE PLOTTED: 7/21/2025 FILE NAME: 11_14_80_S25767_S30-S34.dgn

Ⓐ S67-S85 @ 5½" = 8'-3" (Top)

Ⓑ S86-S90 s/w S86-S90 @ 5½" = 1'-10" (Top)

Ⓒ S86-S89 s/w S86-S89 @ 5½" = 1'-4½" (Top)

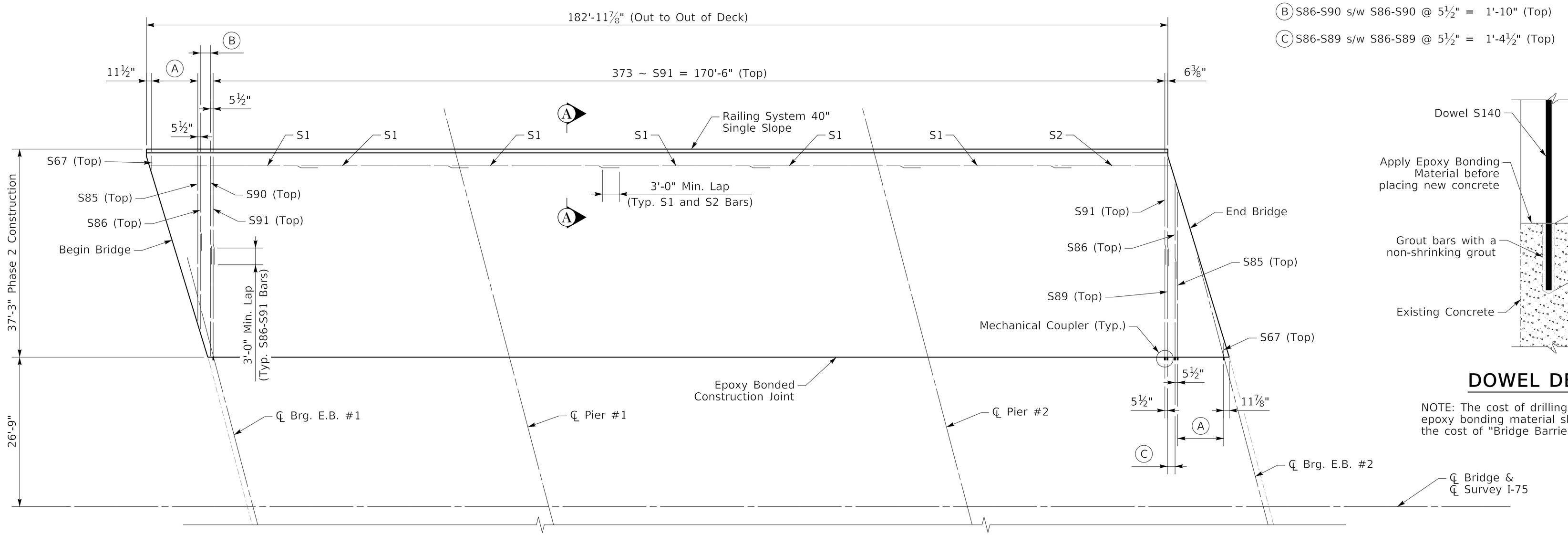

PHASE 2 PLAN

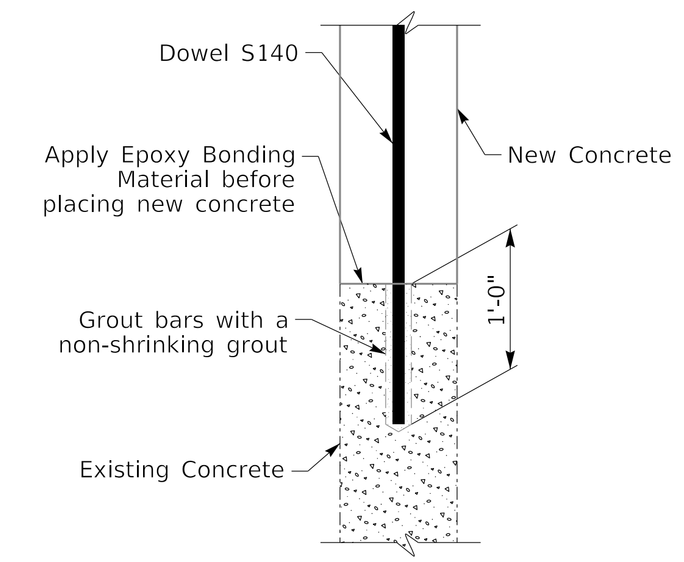

DOWEL DETAILS

NOTE: The cost of drilling holes, grouting, and epoxy bonding material shall be incidental to the cost of "Bridge Barrier Retrofit."

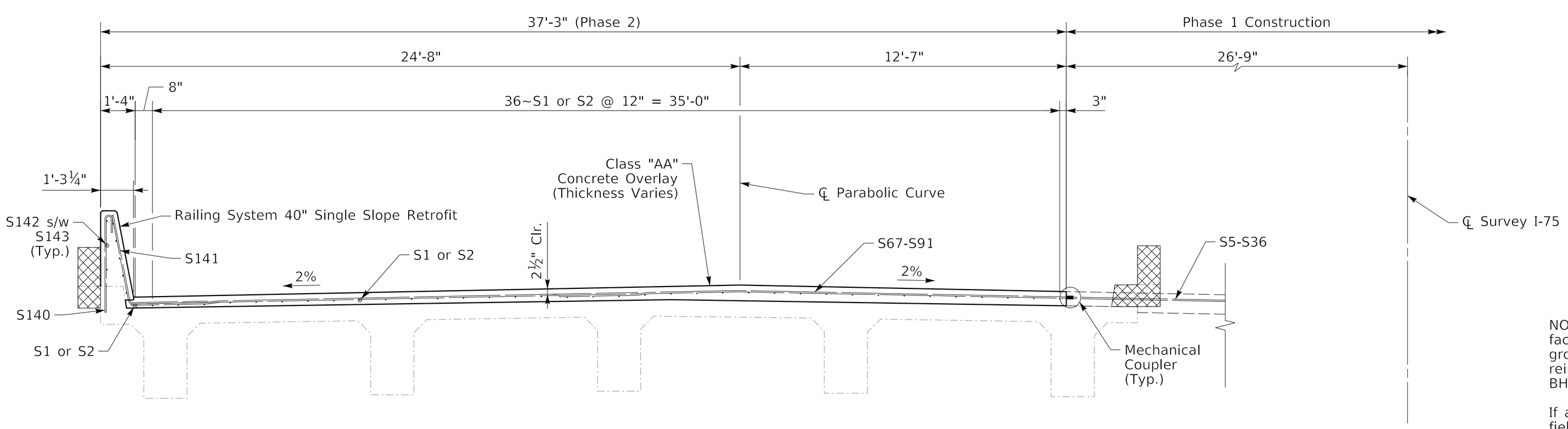

NOTE: Remove cross-hatched area of the existing structure. Include all cost associated with this work in the bid item for Remove Concrete Masonry.

PHASE 2 SECTION

(Looking Ahead Station)

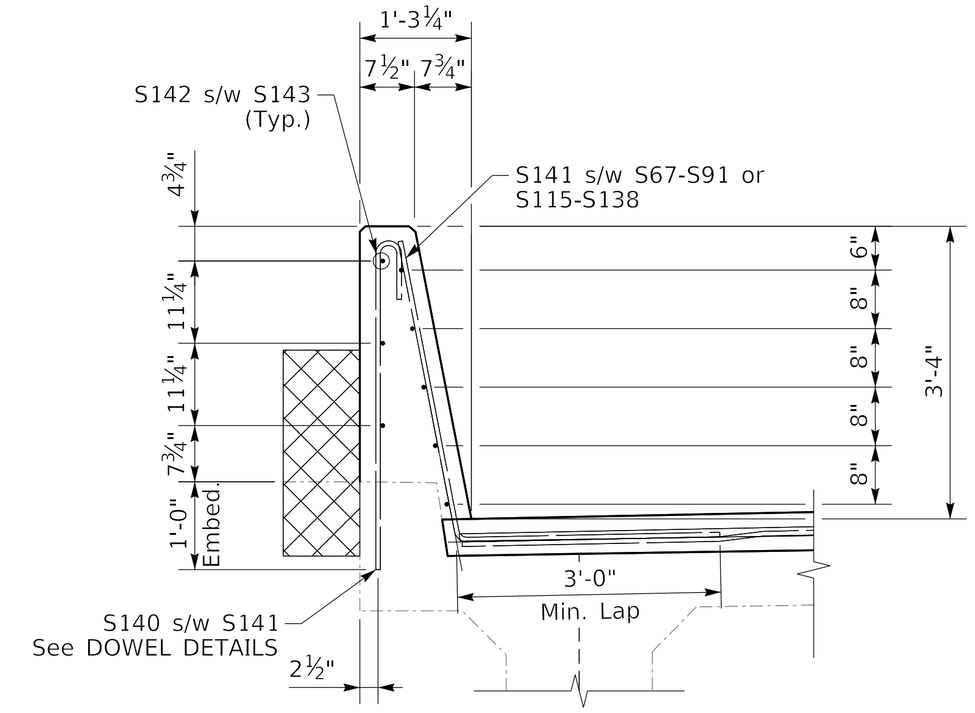

SECTION A-A

NOTE: Grind front face of remaining exterior curb as necessary to maintain required front slope face of 40" barrier and maintain 1½" clear cover behind S142 and S143 bars. Drill and epoxy grout reinforcement as shown. For more information, see GENERAL NOTES sheet. Space reinforcement as shown in Std. Dwg. BHS-010 unless noted otherwise. Contrary to Std. Dwg. BHS-010, use only the barrier reinforcement shown in these plans.

If a 3'-0" lap of S141 bars is not achievable in the acute corners of the deck, contractor shall field bend bars as needed to ensure 3'-0" embedment. As an alternative, contractor may opt to shorten the lap length as needed and add a 4" minimum 90° hook to the end of S141 bars.

The cost of all labor, materials, and equipment necessary to replace the bridge railings, including drilling and grouting, shall be incidental to the unit price bid for Bridge Barrier Retrofit. All concrete removal shall be included in the unit price bid for Remove Concrete Masonry.

COMMONWEALTH OF KENTUCKY DEPARTMENT OF HIGHWAYS	REVISION	DATE	PREPARED BY HDR	DATE: March, 2025	CHECKED BY	SUPERSTRUCTURE (2 OF 5)	ROUTE	ITEM NO. 11-14.8	COUNTY OF WHITLEY
				DESIGNED BY: R. Richardson Jr.	M. Purcell	CROSSING US 25W	I-75	SHEET NO. S31	DRAWING NUMBER 25767
				DETAILED BY: L. Decker	M. Purcell				

Ⓐ S67-S85 @ 5½" = 8'-3" (Top)

Ⓑ S86-S90 s/w S86-S90 @ 5½" = 1'-10" (Top)

Ⓒ S86-S89 s/w S86-S89 @ 5½" = 1'-4½" (Top)

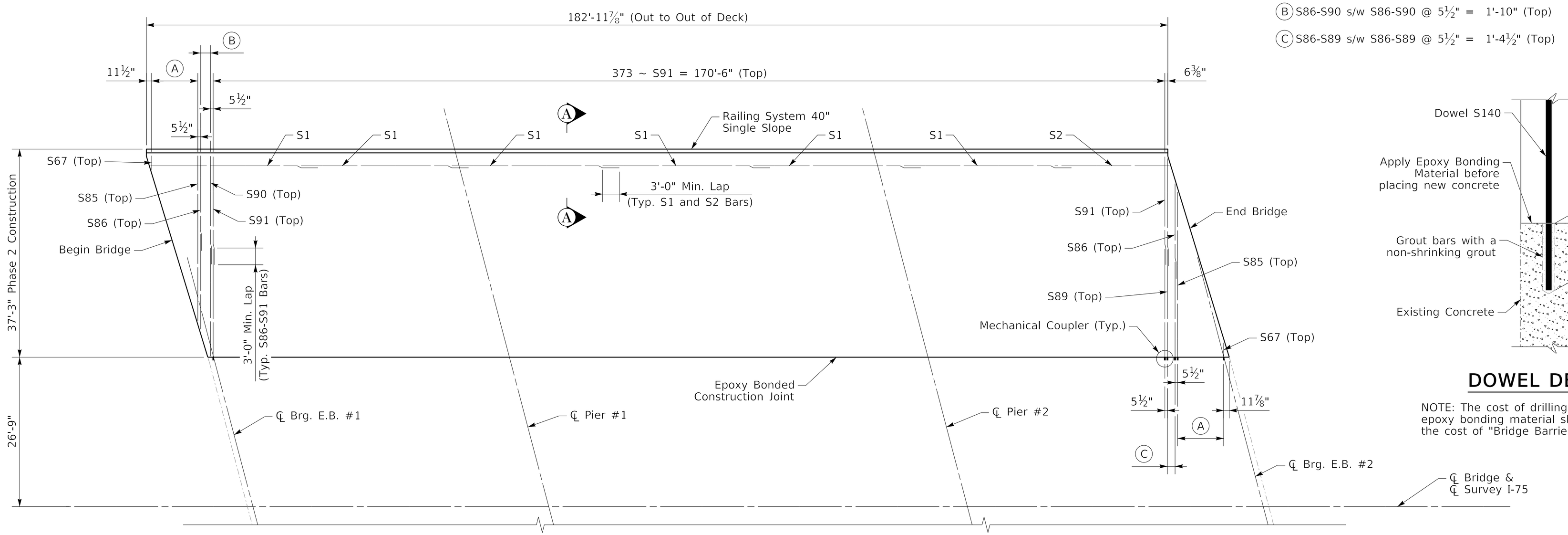

PHASE 2 PLAN

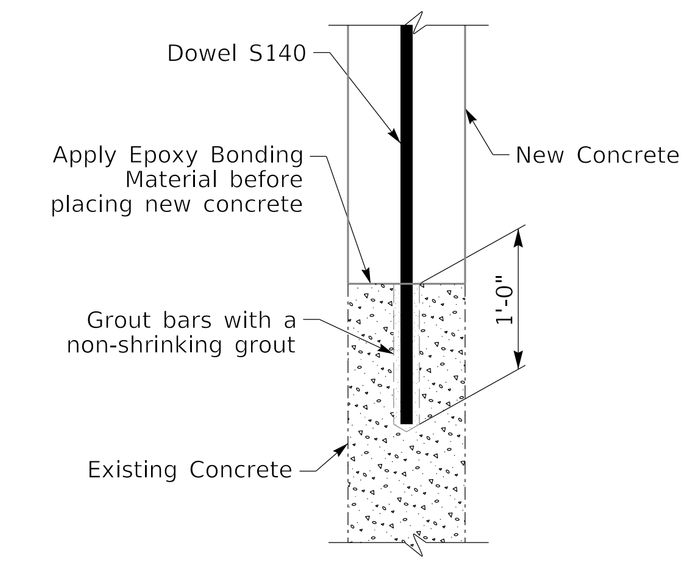

DOWEL DETAILS

NOTE: The cost of drilling holes, grouting, and epoxy bonding material shall be incidental to the cost of "Bridge Barrier Retrofit."

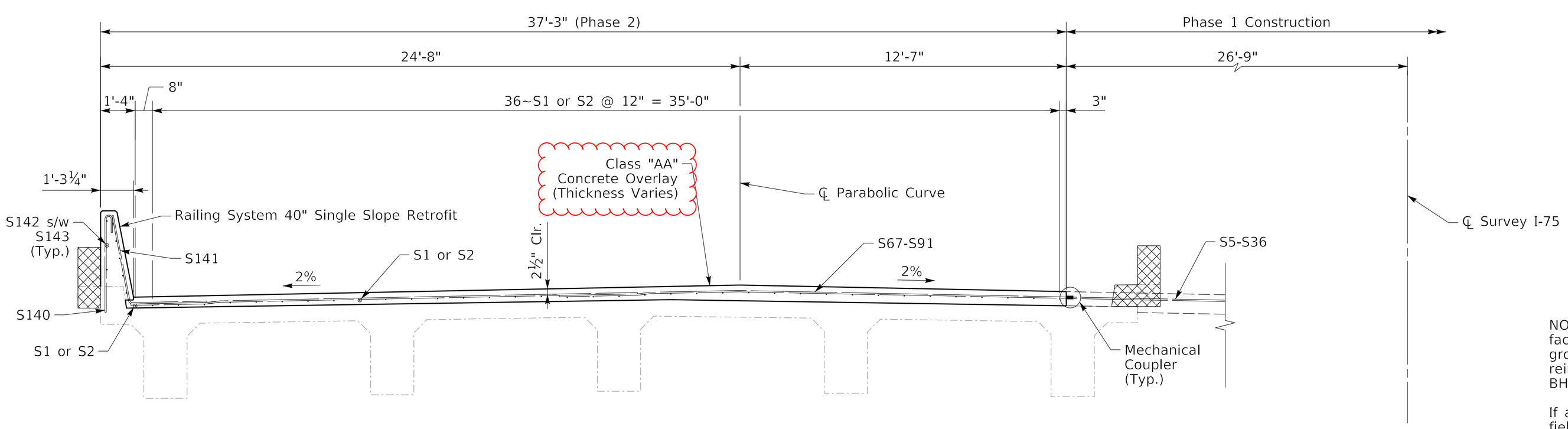

NOTE: Remove cross-hatched area of the existing structure. Include all cost associated with this work in the bid item for Remove Concrete Masonry.

PHASE 2 SECTION

(Looking Ahead Station)

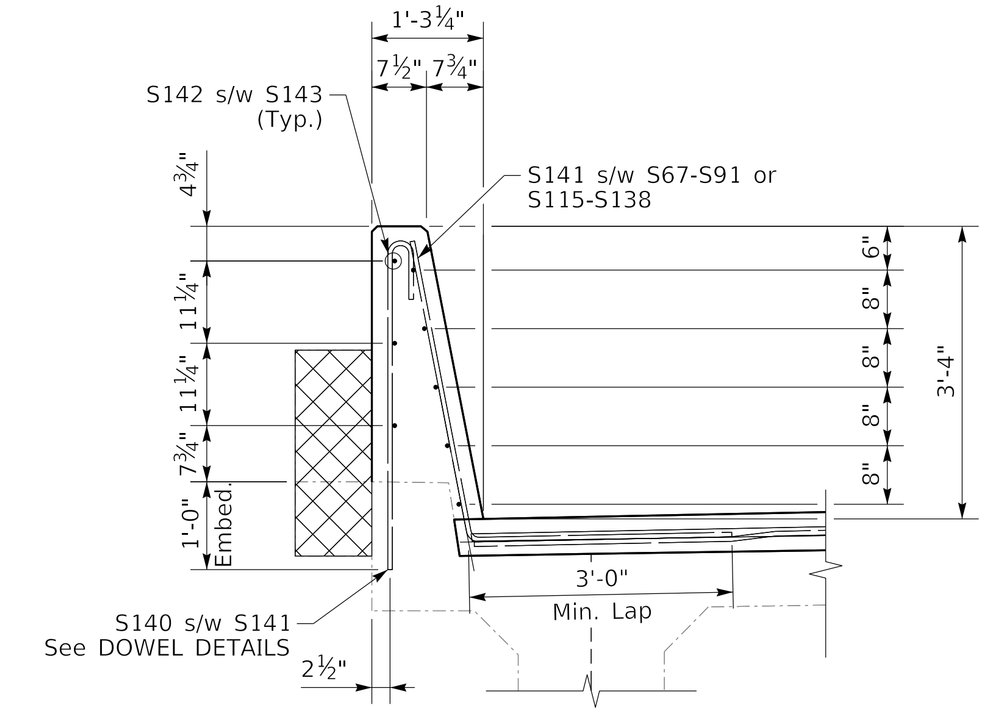

SECTION A-A

NOTE: Grind front face of remaining exterior curb as necessary to maintain required front slope face of 40" barrier and maintain 1½" clear cover behind S142 and S143 bars. Drill and epoxy grout reinforcement as shown. For more information, see GENERAL NOTES sheet. Space reinforcement as shown in Std. Dwg. BHS-010 unless noted otherwise. Contrary to Std. Dwg. BHS-010, use only the barrier reinforcement shown in these plans.

If a 3'-0" lap of S141 bars is not achievable in the acute corners of the deck, contractor shall field bend bars as needed to ensure 3'-0" embedment. As an alternative, contractor may opt to shorten the lap length as needed and add a 4" minimum 90° hook to the end of S141 bars.

The cost of all labor, materials, and equipment necessary to replace the bridge railings, including drilling and grouting, shall be incidental to the unit price bid for Bridge Barrier Retrofit. All concrete removal shall be included in the unit price bid for Remove Concrete Masonry.

NOTES:

For SECTION A-A see SUPERSTRUCTURE (2 OF 5) sheet.

(A) S92-S110 @ 5½" = 8'-3" (Top)

(B) S111-S114 s/w S111-S114 @ 5½" = 1'-4½" (Top)

(C) S115-S119 s/w S115-S119 @ 5½" = 1'-10" (Top)

(D) S120-S138 @ 5½" = 8'-3" (Top)

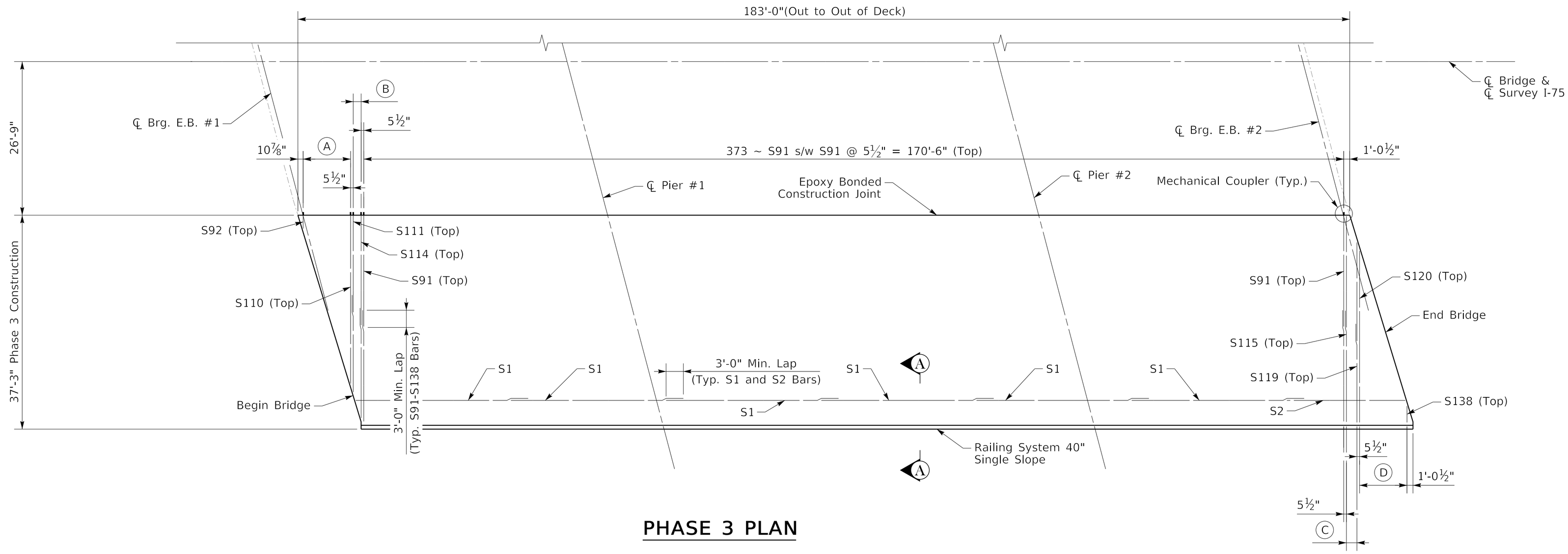

PHASE 3 PLAN

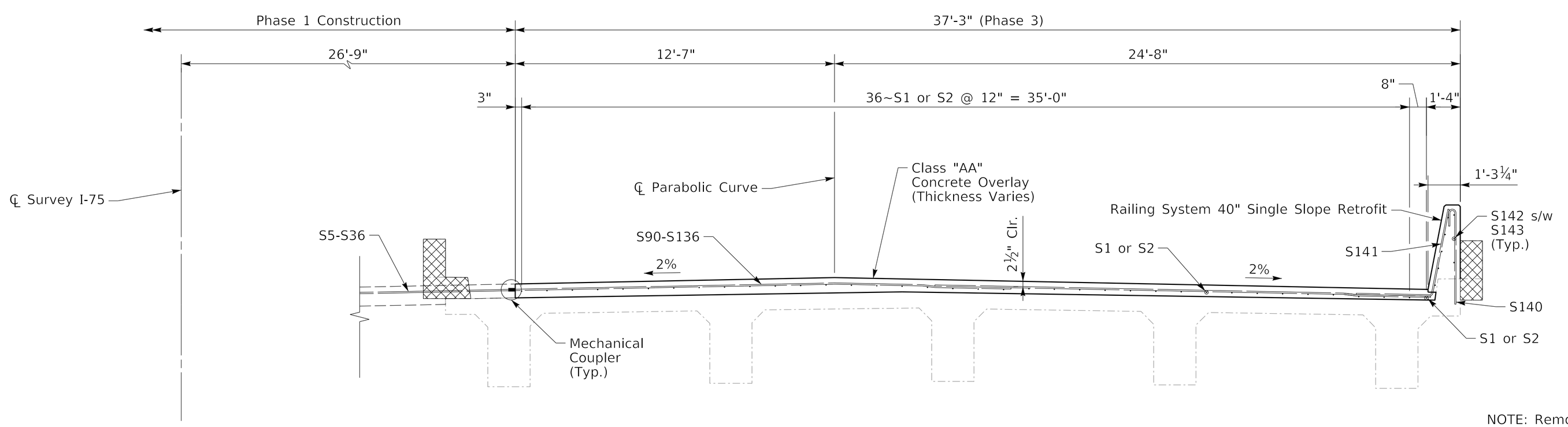

NOTE: Remove cross-hatched area of the existing structure. Include all cost associated with this work in the bid item for Remove Concrete Masonry.

PHASE 3 SECTION

(Looking Ahead Station)

COMMONWEALTH OF KENTUCKY DEPARTMENT OF HIGHWAYS	REVISION	DATE	PREPARED BY HDR	DATE: March, 2025	CHECKED BY	SUPERSTRUCTURE (3 OF 5)	ROUTE	ITEM NO.	COUNTY OF
				DESIGNED BY: R. Richardson Jr.	M. Purcell	CROSSING	I-75	11-14.8	WHITLEY
				DETAILED BY: L. Decker	M. Purcell	US 25W		SHEET NO. S32	DRAWING NUMBER 25767

NOTES:

For SECTION A-A see SUPERSTRUCTURE (2 OF 5) sheet.

(A) S92-S110 @ 5½" = 8'-3" (Top)

(B) S111-S114 s/w S111-S114 @ 5½" = 1'-4½" (Top)

(C) S115-S119 s/w S115-S119 @ 5½" = 1'-10" (Top)

(D) S120-S138 @ 5½" = 8'-3" (Top)

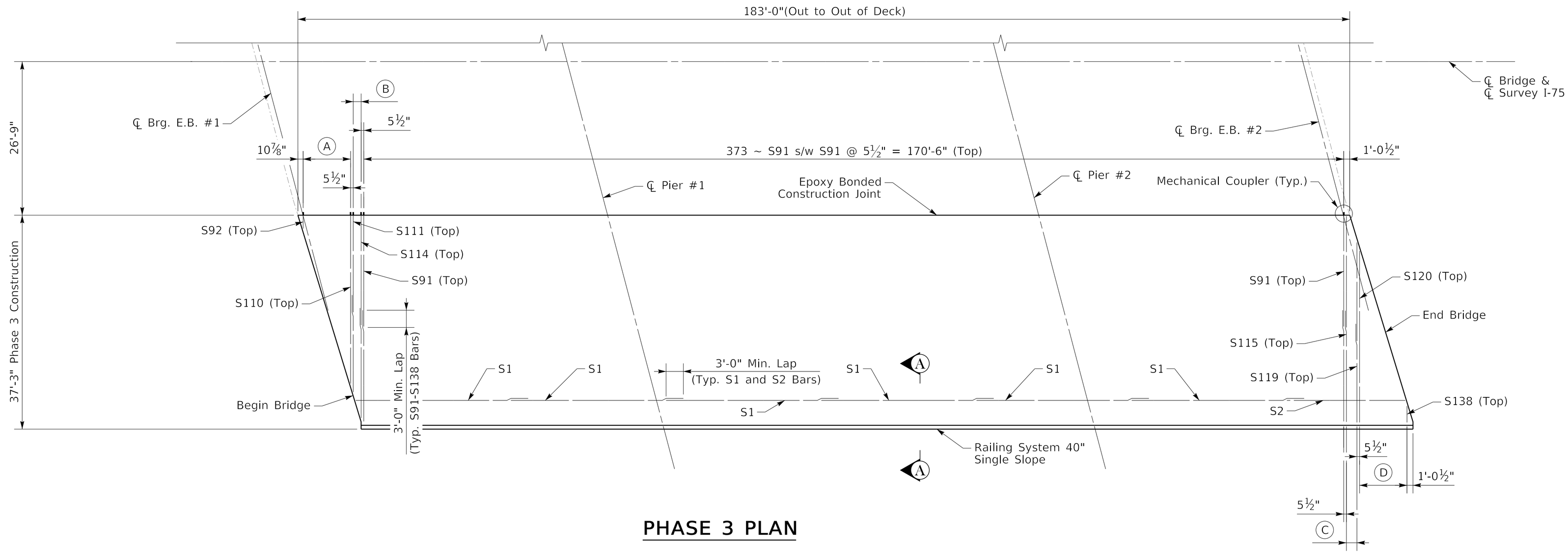

PHASE 3 PLAN

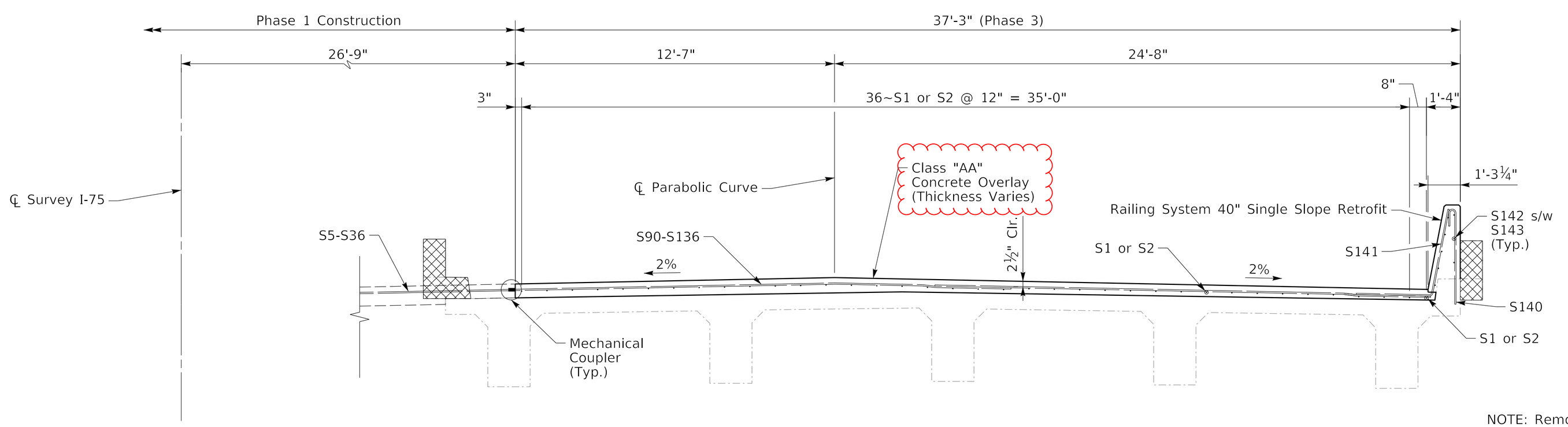

NOTE: Remove cross-hatched area of the existing structure. Include all cost associated with this work in the bid item for Remove Concrete Masonry.

PHASE 3 SECTION

(Looking Ahead Station)

COMMONWEALTH OF KENTUCKY DEPARTMENT OF HIGHWAYS TEAM KENTUCKY TRANSPORTATION CABINET	REVISION CHANGE OVERLAY TO "AA" CONCRETE	DATE 07/21/2025	PREPARED BY HDR	DATE: March, 2025 DESIGNED BY: R. Richardson Jr. DETAILED BY: L. Decker	CHECKED BY M. Purcell M. Purcell	*SUPERSTRUCTURE (3 OF 5)* CROSSING US 25W	ROUTE I-75	ITEM NO. 11-14.8 SHEET NO. S32	COUNTY OF WHITLEY DRAWING NUMBER 25767

MicroStation v10.16.3.31 USER: LDECKER DATE PLOTTED: 7/21/2025 FILE NAME: 11_14_80_S25767_S30-S34.dgn

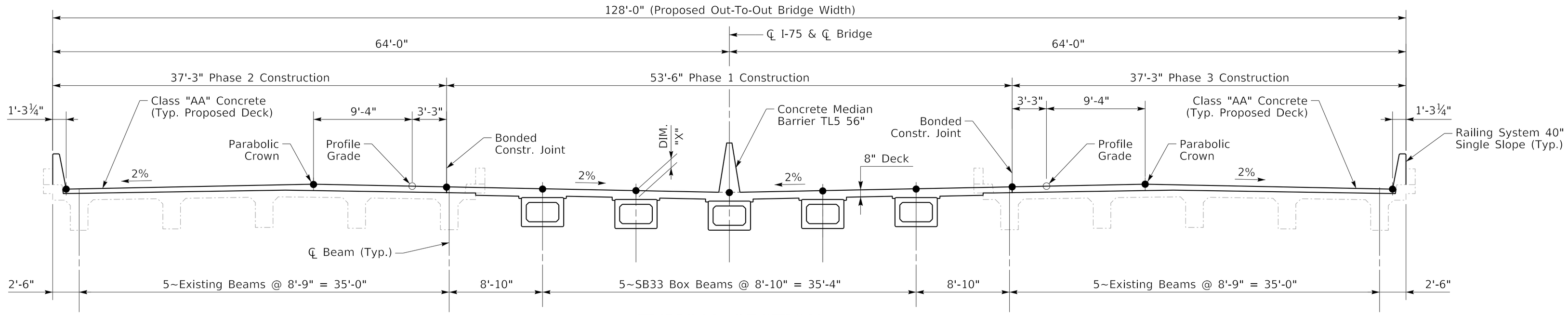

TYPICAL SECTION

(Looking Ahead Station)

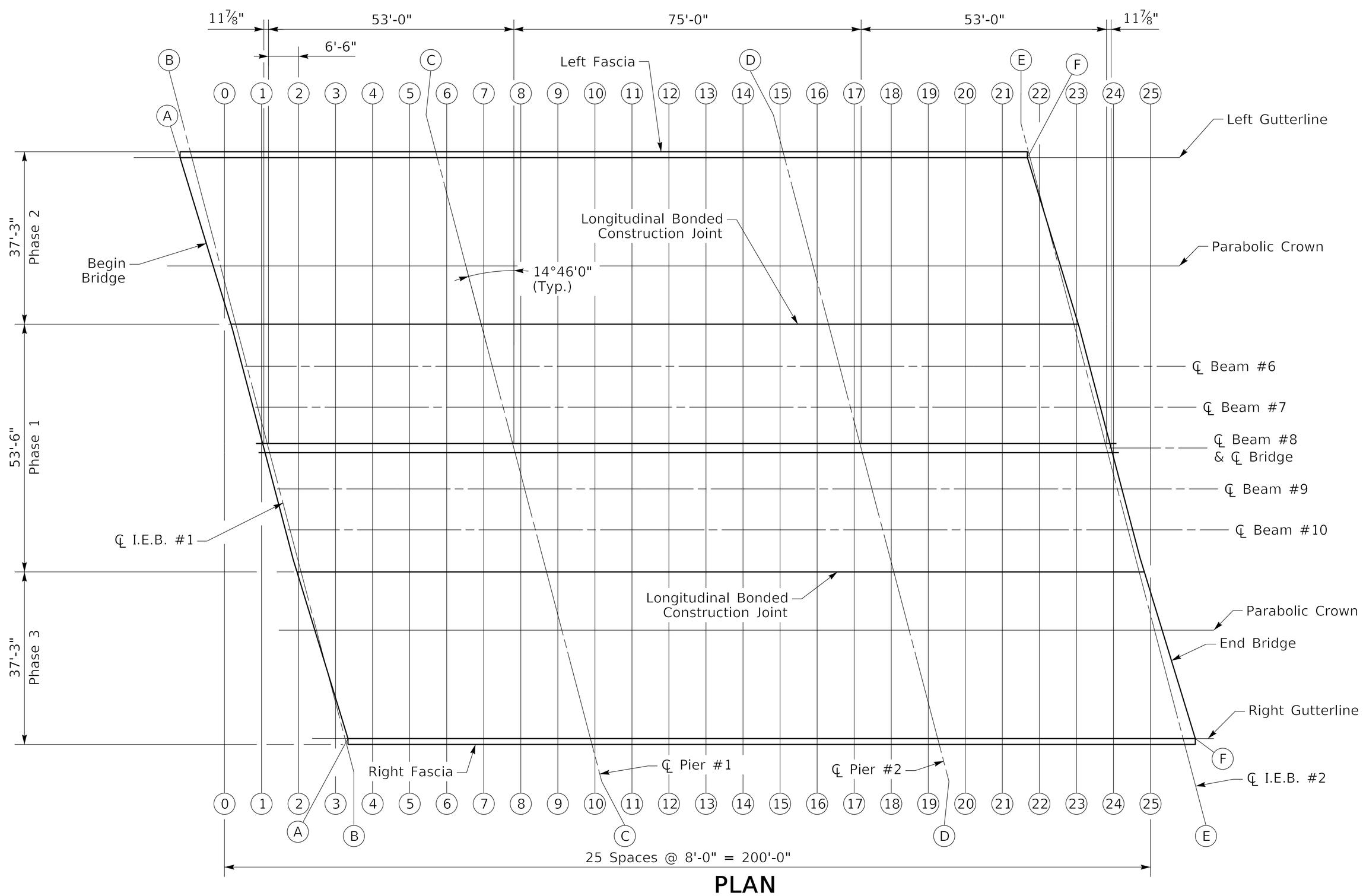

PLAN

NOTES:

Take elevations on top of beam at points indicated by the grid layout. The beam elevations are to be read to three decimals and entered in tables under "Top of Beam" elevations.

Compute dimension "X" as follows: "Construction Elevation" minus "Top of Beam" elevation equals dimension "X". Construction Elevations include camber due to weight of the concrete slab and barrier. Measuring of dimension "X" gives the final check on beam tolerances for camber, beam damage, and errors in erection that produce reverse cambers, sags, and unsightly fascia beams.

The minimum "X" dimension is that which provides the minimum deck thickness shown in the plans at the controlling edge of the top flange (accounting for the cross-slope of the deck).

For setting templates, measure dimension "X" above top of beams for top of template. Do not set template by elevations.

Temporary supports or shoring will not be permitted under the girders when pouring the concrete floor slab or when taking "Top of Beam" elevations.

Construct barrier to roadway grade. Do not add camber to the barrier.

Note to Resident: The "Maximum Allowable Camber" shown on the beam sheet is the amount of camber, measured prior to casting the deck, above which the beam will begin to encroach into the slab. If the measured camber is greater than the "Maximum Allowable Camber" the contractor will be responsible for any necessary adjustments to assure the minimum slab thickness shown in the plans. This work will be considered incidental to the completion of the structure and must have the approval of the Engineer.

The construction elevation at a given point is the elevation to pour the deck to. This elevation is the sum of two numbers: 1) the desired final grade elevation and 2) the anticipated deflection occurring during the deck pour and/or after the deck pour. Significant deflection is not anticipated during the placement of the Class "AA" Concrete overlay of the existing deck.

Phased construction introduces some complexity. The Contractor shall work with the lead construction inspector to ensure a smooth transition in the final condition from the Phase 1 deck to Phase 2 deck and also from the Phase 1 deck to the Phase 3 deck.

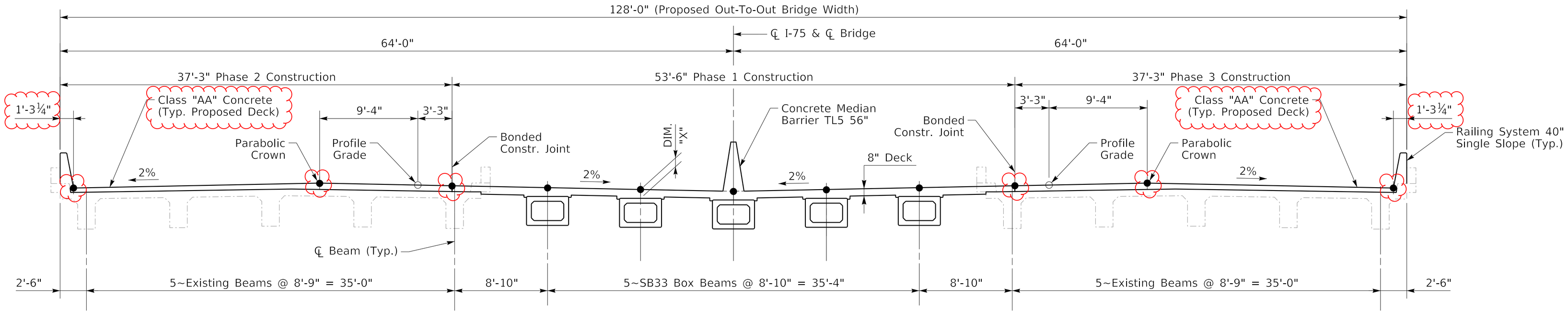

TYPICAL SECTION

(Looking Ahead Station)

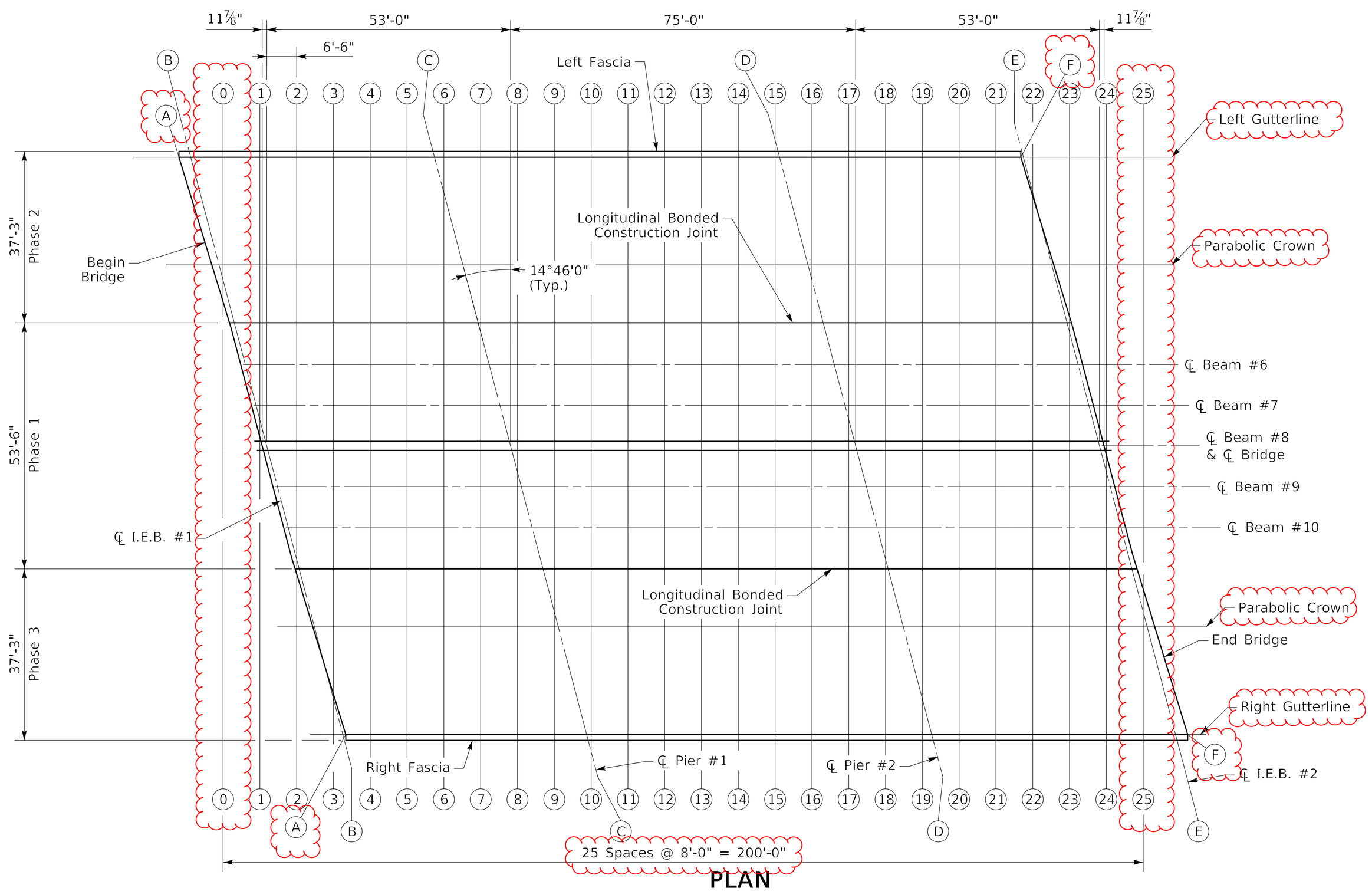

PLAN

NOTES:

Take elevations on top of beam at points indicated by the grid layout. The beam elevations are to be read to three decimals and entered in tables under "Top of Beam" elevations.

Compute dimension "X" as follows: "Construction Elevation" minus "Top of Beam" elevation equals dimension "X". Construction Elevations include camber due to weight of the concrete slab and barrier. Measuring of dimension "X" gives the final check on beam tolerances for camber, beam damage, and errors in erection that produce reverse cambers, sags, and unsightly fascia beams.

The minimum "X" dimension is that which provides the minimum deck thickness shown in the plans at the controlling edge of the top flange (accounting for the cross-slope of the deck).

For setting templates, measure dimension "X" above top of beams for top of template. Do not set template by elevations.

Temporary supports or shoring will not be permitted under the girders when pouring the concrete floor slab or when taking "Top of Beam" elevations.

Construct barrier to roadway grade. Do not add camber to the barrier.

Note to Resident: The "Maximum Allowable Camber" shown on the beam sheet is the amount of camber, measured prior to casting the deck, above which the beam will begin to encroach into the slab. If the measured camber is greater than the "Maximum Allowable Camber" the contractor will be responsible for any necessary adjustments to assure the minimum slab thickness shown in the plans. This work will be considered incidental to the completion of the structure and must have the approval of the Engineer.

The construction elevation at a given point is the elevation to pour the deck to. This elevation is the sum of two numbers: 1) the desired final grade elevation and 2) the anticipated deflection occuring during the deck pour and/or after the deck pour. Significant deflection is not anticipated during the placement of the Class "AA" Concrete overlay of the existing deck.

Phased construction introduces some complexity. The Contractor shall work with the lead construction inspector to ensure a smooth transition in the final condition from the Phase 1 deck to Phase 2 deck and also from the Phase 1 deck to the Phase 3 deck.

COMMONWEALTH OF KENTUCKY
DEPARTMENT OF HIGHWAYS

TEAM KENTUCKY Transportation Cabinet

REVISION	DATE
LOCATIONS ADDED	07/21/2025

PREPARED BY HDR

DATE: March, 2025	CHECKED BY
DESIGNED BY: L. Decker	M. Purcell
DETAILED BY: L. Decker	M. Purcell

CONSTRUCTION ELEV. (1 OF 3)

ROUTE	ITEM NO.	COUNTY OF
I-75	11-14.8	WHITLEY
CROSSING: US 25W	SHEET NO. S35	DRAWING NUMBER 25767

PHASE 1 CONSTRUCTION

Location	℄ Beam #6			℄ Beam #7			℄ Beam #8 & ℄ Bridge			℄ Beam #9			℄ Beam #10		
	Construction Elevation	Top Of Beam	Dimension "X"	Construction Elevation	Top Of Beam	Dimension "X"	Construction Elevation	Top Of Beam	Dimension "X"	Construction Elevation	Top Of Beam	Dimension "X"	Construction Elevation	Top Of Beam	Dimension "X"
SKEW LINE AA	1168.171			1168.013			1167.855			1168.051			1168.247		
SKEW LINE BB	1168.179			1168.021			1167.863			1168.059			1168.255		
SKEW LINE CC	1168.687			1168.537			1168.387			1168.591			1168.795		
SKEW LINE DD	1169.713			1169.574			1169.435			1169.650			1169.865		
SKEW LINE EE	1170.654			1170.523			1170.392			1170.615			1170.838		
SKEW LINE FF	1170.674			1170.542			1170.412			1170.635			1170.858		
GRID LINE 0	--			--			--			--			--		
GRID LINE 1	1168.209			1168.029			--			--			--		
GRID LINE 2	1168.286			1168.107			1167.927			1168.100			1168.274		
GRID LINE 3	1168.364			1168.186			1168.007			1168.182			1168.356		
GRID LINE 4	1168.442			1168.265			1168.088			1168.263			1168.439		
GRID LINE 5	1168.518			1168.342			1168.167			1168.344			1168.521		
GRID LINE 6	1168.593			1168.419			1168.245			1168.423			1168.602		
GRID LINE 7	1168.669			1168.496			1168.322			1168.502			1168.682		
GRID LINE 8	1168.783			1168.597			1168.411			1168.582			1168.762		
GRID LINE 9	1168.909			1168.724			1168.539			1168.706			1168.873		
GRID LINE 10	1169.032			1168.849			1168.666			1168.835			1169.004		
GRID LINE 11	1169.151			1168.971			1168.790			1168.962			1169.132		
GRID LINE 12	1169.263			1169.086			1168.908			1169.083			1169.257		
GRID LINE 13	1169.368			1169.195			1169.020			1169.198			1169.375		
GRID LINE 14	1169.468			1169.297			1169.125			1169.306			1169.486		
GRID LINE 15	1169.563			1169.394			1169.225			1169.408			1169.591		
GRID LINE 16	1169.656			1169.489			1169.321			1169.507			1169.691		
GRID LINE 17	1169.768			1169.588			1169.417			1169.603			1169.789		
GRID LINE 18	1169.911			1169.732			1169.552			1169.725			1169.899		
GRID LINE 19	1170.055			1169.877			1169.698			1169.872			1170.046		
GRID LINE 20	1170.198			1170.021			1169.844			1170.019			1170.195		
GRID LINE 21	1170.339			1170.164			1169.988			1170.165			1170.342		
GRID LINE 22	1170.480			1170.306			1170.132			1170.310			1170.489		
GRID LINE 23	1170.621			1170.448			1170.275			1170.454			1170.634		
GRID LINE 24	--			--			--			1170.600			1170.780		
GRID LINE 25	--			--			--			--			--		

PHASE 1 CONSTRUCTION

Location	℄ Beam #6			℄ Beam #7			℄ Beam #8 & ℄ Bridge			℄ Beam #9			℄ Beam #10		
	Construction Elevation	Top Of Beam	Dimension "X"	Construction Elevation	Top Of Beam	Dimension "X"	Construction Elevation	Top Of Beam	Dimension "X"	Construction Elevation	Top Of Beam	Dimension "X"	Construction Elevation	Top Of Beam	Dimension "X"
SKEW LINE AA	1168.171			1168.013			1167.855			1168.051			1168.247		
SKEW LINE BB	1168.179			1168.021			1167.863			1168.059			1168.255		
SKEW LINE CC	1168.687			1168.537			1168.387			1168.591			1168.795		
SKEW LINE DD	1169.713			1169.574			1169.435			1169.650			1169.865		
SKEW LINE EE	1170.654			1170.523			1170.392			1170.615			1170.838		
SKEW LINE FF	1170.674			1170.542			1170.412			1170.635			1170.858		
GRID LINE 0	--			--			--			--			--		
GRID LINE 1	1168.209			1168.029			--			--			--		
GRID LINE 2	1168.286			1168.107			1167.927			1168.100			1168.274		
GRID LINE 3	1168.364			1168.186			1168.007			1168.182			1168.356		
GRID LINE 4	1168.442			1168.265			1168.088			1168.263			1168.439		
GRID LINE 5	1168.518			1168.342			1168.167			1168.344			1168.521		
GRID LINE 6	1168.593			1168.419			1168.245			1168.423			1168.602		
GRID LINE 7	1168.669			1168.496			1168.322			1168.502			1168.682		
GRID LINE 8	1168.783			1168.597			1168.411			1168.582			1168.762		
GRID LINE 9	1168.909			1168.724			1168.539			1168.706			1168.873		
GRID LINE 10	1169.032			1168.849			1168.666			1168.835			1169.004		
GRID LINE 11	1169.151			1168.971			1168.790			1168.962			1169.132		
GRID LINE 12	1169.263			1169.086			1168.908			1169.083			1169.257		
GRID LINE 13	1169.368			1169.195			1169.020			1169.198			1169.375		
GRID LINE 14	1169.468			1169.297			1169.125			1169.306			1169.486		
GRID LINE 15	1169.563			1169.394			1169.225			1169.408			1169.591		
GRID LINE 16	1169.656			1169.489			1169.321			1169.507			1169.691		
GRID LINE 17	1169.768			1169.588			1169.417			1169.603			1169.789		
GRID LINE 18	1169.911			1169.732			1169.552			1169.725			1169.899		
GRID LINE 19	1170.055			1169.877			1169.698			1169.872			1170.046		
GRID LINE 20	1170.198			1170.021			1169.844			1170.019			1170.195		
GRID LINE 21	1170.339			1170.164			1169.988			1170.165			1170.342		
GRID LINE 22	1170.480			1170.306			1170.132			1170.310			1170.489		
GRID LINE 23	1170.621			1170.448			1170.275			1170.454			1170.634		
GRID LINE 24	--			--			--			1170.600			1170.780		
GRID LINE 25	--			--			--			--			--		

PHASE 2 CONSTRUCTION

Location	Left Gutterline	Left Parabolic Crown	Left Construction Joint
SKEW LINE AA	1168.048	1168.531	1168.334
SKEW LINE BB	1168.055	1168.538	1168.342
SKEW LINE CC	1168.523	1169.027	1168.842
SKEW LINE DD	1169.492	1170.025	1169.856
SKEW LINE EE	1170.393	1170.947	1170.789
SKEW LINE FF	1170.412	1170.966	1170.809
GRID LINE 0	1168.107	1168.545	--
GRID LINE 1	1168.169	1168.607	1168.386
GRID LINE 2	1168.236	1168.674	1168.452
GRID LINE 3	1168.307	1168.745	1168.523
GRID LINE 4	1168.382	1168.820	1168.598
GRID LINE 5	1168.461	1168.899	1168.677
GRID LINE 6	1168.544	1168.982	1168.761
GRID LINE 7	1168.632	1169.070	1168.848
GRID LINE 8	1168.723	1169.161	1168.939
GRID LINE 9	1168.818	1169.256	1169.035
GRID LINE 10	1168.918	1169.356	1169.134
GRID LINE 11	1169.022	1169.459	1169.238
GRID LINE 12	1169.129	1169.567	1169.345
GRID LINE 13	1169.241	1169.679	1169.457
GRID LINE 14	1169.357	1169.795	1169.573
GRID LINE 15	1169.477	1169.915	1169.693
GRID LINE 16	1169.601	1170.039	1169.817
GRID LINE 17	1169.729	1170.167	1169.945
GRID LINE 18	1169.861	1170.299	1170.078
GRID LINE 19	1169.998	1170.436	1170.214
GRID LINE 20	1170.138	1170.576	1170.354
GRID LINE 21	1170.283	1170.721	1170.499
GRID LINE 22	--	1170.869	1170.647
GRID LINE 23	--	--	--
GRID LINE 24	--	--	--
GRID LINE 25	--	--	--

PHASE 3 CONSTRUCTION

Location	Right Construction Joint	Right Parabolic Crown	Right Gutterline
SKEW LINE AA	1168.449	1168.699	1168.317
SKEW LINE BB	1168.457	1168.708	1168.326
SKEW LINE CC	1169.005	1169.267	1168.906
SKEW LINE DD	1170.087	1170.365	1170.033
SKEW LINE EE	1171.068	1171.357	1171.046
SKEW LINE FF	1171.088	1171.377	1171.067
GRID LINE 0	--	--	--
GRID LINE 1	--	--	--
GRID LINE 2	--	--	--
GRID LINE 3	1168.523	1168.745	--
GRID LINE 4	1168.598	1168.820	1168.382
GRID LINE 5	1168.677	1168.899	1168.461
GRID LINE 6	1168.761	1168.982	1168.544
GRID LINE 7	1168.848	1169.070	1168.632
GRID LINE 8	1168.939	1169.161	1168.723
GRID LINE 9	1169.035	1169.256	1168.818
GRID LINE 10	1169.134	1169.356	1168.918
GRID LINE 11	1169.238	1169.459	1169.022
GRID LINE 12	1169.345	1169.567	1169.129
GRID LINE 13	1169.457	1169.679	1169.241
GRID LINE 14	1169.573	1169.795	1169.357
GRID LINE 15	1169.693	1169.915	1169.477
GRID LINE 16	1169.817	1170.039	1169.601
GRID LINE 17	1169.945	1170.167	1169.729
GRID LINE 18	1170.078	1170.299	1169.861
GRID LINE 19	1170.214	1170.436	1169.998
GRID LINE 20	1170.354	1170.576	1170.138
GRID LINE 21	1170.499	1170.721	1170.283
GRID LINE 22	1170.647	1170.869	1170.431
GRID LINE 23	1170.800	1171.022	1170.584
GRID LINE 24	1170.957	1171.179	1170.741
GRID LINE 25	--	1171.339	1170.902

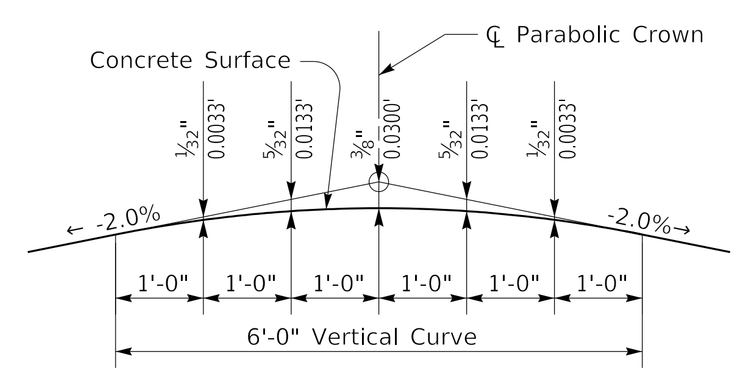

PARABOLIC CROWN

PHASE 2 CONSTRUCTION

Location	Left Gutterline	Left Parabolic Crown	Left Construction Joint
SKEW LINE AA	1168.048	1168.531	1168.334
SKEW LINE BB	1168.055	1168.538	1168.342
SKEW LINE CC	1168.523	1169.027	1168.842
SKEW LINE DD	1169.492	1170.025	1169.856
SKEW LINE EE	1170.393	1170.947	1170.789
SKEW LINE FF	1170.412	1170.966	1170.809
GRID LINE 0	1168.107	1168.545	--
GRID LINE 1	1168.169	1168.607	1168.386
GRID LINE 2	1168.236	1168.674	1168.452
GRID LINE 3	1168.307	1168.745	1168.523
GRID LINE 4	1168.382	1168.820	1168.598
GRID LINE 5	1168.461	1168.899	1168.677
GRID LINE 6	1168.544	1168.982	1168.761
GRID LINE 7	1168.632	1169.070	1168.848
GRID LINE 8	1168.723	1169.161	1168.939
GRID LINE 9	1168.818	1169.256	1169.035
GRID LINE 10	1168.918	1169.356	1169.134
GRID LINE 11	1169.022	1169.459	1169.238
GRID LINE 12	1169.129	1169.567	1169.345
GRID LINE 13	1169.241	1169.679	1169.457
GRID LINE 14	1169.357	1169.795	1169.573
GRID LINE 15	1169.477	1169.915	1169.693
GRID LINE 16	1169.601	1170.039	1169.817
GRID LINE 17	1169.729	1170.167	1169.945
GRID LINE 18	1169.861	1170.299	1170.078
GRID LINE 19	1169.998	1170.436	1170.214
GRID LINE 20	1170.138	1170.576	1170.354
GRID LINE 21	1170.283	1170.721	1170.499
GRID LINE 22	--	1170.869	1170.647
GRID LINE 23	--	--	--
GRID LINE 24	--	--	--
GRID LINE 25	--	--	--

PHASE 3 CONSTRUCTION

Location	Right Construction Joint	Right Parabolic Crown	Right Gutterline
SKEW LINE AA	1168.449	1168.699	1168.317
SKEW LINE BB	1168.457	1168.708	1168.326
SKEW LINE CC	1169.005	1169.267	1168.906
SKEW LINE DD	1170.087	1170.365	1170.033
SKEW LINE EE	1171.068	1171.357	1171.046
SKEW LINE FF	1171.088	1171.377	1171.067
GRID LINE 0	--	--	--
GRID LINE 1	--	--	--
GRID LINE 2	--	--	--
GRID LINE 3	1168.523	1168.745	--
GRID LINE 4	1168.598	1168.820	1168.382
GRID LINE 5	1168.677	1168.899	1168.461
GRID LINE 6	1168.761	1168.982	1168.544
GRID LINE 7	1168.848	1169.070	1168.632
GRID LINE 8	1168.939	1169.161	1168.723
GRID LINE 9	1169.035	1169.256	1168.818
GRID LINE 10	1169.134	1169.356	1168.918
GRID LINE 11	1169.238	1169.459	1169.022
GRID LINE 12	1169.345	1169.567	1169.129
GRID LINE 13	1169.457	1169.679	1169.241
GRID LINE 14	1169.573	1169.795	1169.357
GRID LINE 15	1169.693	1169.915	1169.477
GRID LINE 16	1169.817	1170.039	1169.601
GRID LINE 17	1169.945	1170.167	1169.729
GRID LINE 18	1170.078	1170.299	1169.861
GRID LINE 19	1170.214	1170.436	1169.998
GRID LINE 20	1170.354	1170.576	1170.138
GRID LINE 21	1170.499	1170.721	1170.283
GRID LINE 22	1170.647	1170.869	1170.431
GRID LINE 23	1170.800	1171.022	1170.584
GRID LINE 24	1170.957	1171.179	1170.741
GRID LINE 25	--	1171.339	1170.902

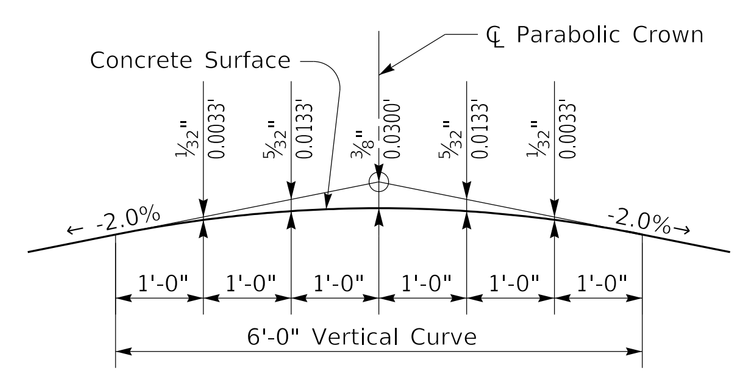

PARABOLIC CROWN